BACK TO SECRET CB INDEX

SECRET CB VOLUME 24

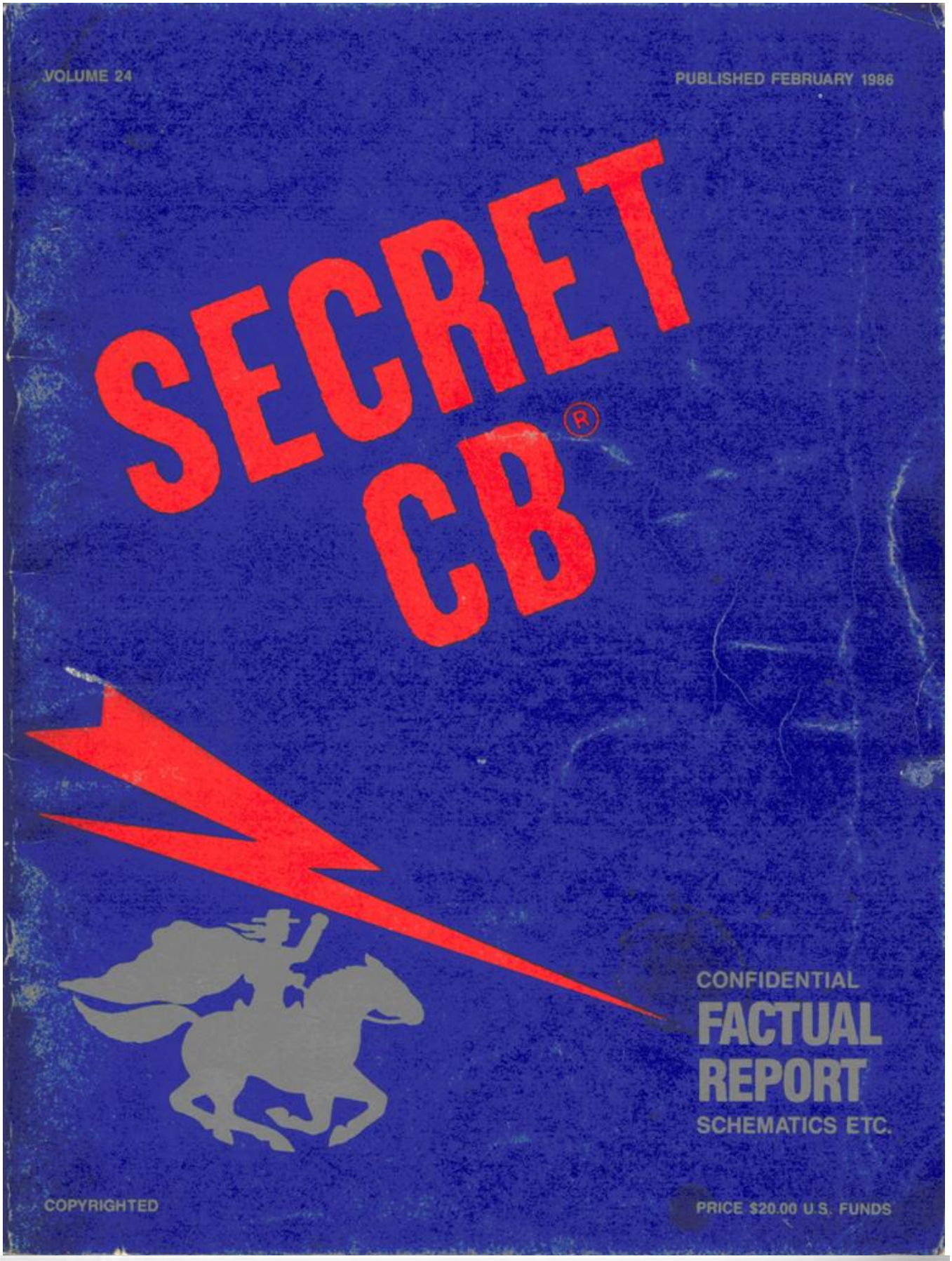

IMPORTANT: READ THIS FIRST

The information in this book is not to be used to exceed F.C.C. specifications, in any case, as applied to power, modulation, frequency spectrum, etc. It is illegal to do this to any CLASS D RADIO.

This book is a factual report of gathered information, and as such is intended for use on radios

for EXPORT ONLY.

If you are not familiar with electronics, it is better to check for advice with your local electronics or CB center, as to restrictions, etc., concerning your radio.

More information, on other units will be forthcoming in future issues.

This book will not be found at a book store, but can be obtained through your local CB Dealer or Distributor, or direct from Selman Enterprises.

Secret CB®
Volume Twenty-Four
Published February 1986

©Copyright 1986, Selman Enterprises, Inc.
All rights reserved. No part of this book shall be reproduced, stored in a retrieval system, or transmitted by any means, electronic, mechanical, photocopying, recording, or otherwise, without written permission from the publisher. No patent liability is assumed with respect to the use of the information contained herein. While every precaution has been taken in the preparation of this book, the publisher assumes no responsibility for errors or omissions. Neither is any liability assumed for damages resulting from the use of the information contained herein.

PRINTED IN THE UNITED STATES OF AMERICA

Address any and all inquiries to:

Selman Enterprises, Inc.
P.O. Box 8189
Corpus Christi, Texas 78412

(512) 853-2935

ACKNOWLEDGEMENTS

SECRET CB WISHES TO GRATEFULLY ACKNOWLEDGE THE FOLLOWING PEOPLE FOR THEIR HELP AND CONTRIBUTIONS TOWARD GETTING VOLUME 24 IN PRINT. THEIR ENCOURAGEMENT AND CONTRIBUTION OF MATERIAL HAS BEEN INVALUABLE.

G. B.
DON GARRISON
WAYNE HALL
LESCOM
GREG LOWRY
R. M.
OLD GROUCH
G. S.
JIM SCHLEITWILER
RAY STEWART
KEN TOUHEY
JAMES VAUGHAN
BILL WENTZ

WANTED

NEW MODIFICATIONS
NEW CONVERSIONS
TECHNICAL TIPS
PROJECT PLANS
ETC. ETC. ETC.

DORIS SAYS "THANKS" AND A FREE BOOK TO THE ABOVE PEOPLE.

This year we are celebrating our 10th ANNIVERSARY in business and 24th VOLUME of "SECRET CB".

We truly appreciate the confidence you have placed in us. As it is the loyalty of our customers that enables us to succeed.

The "SECRET CB" is our PRIDE and JOY. We are happy that so many of our customers have contributed vital information so important to the publishing of this book. We encourage all of you to send in comments, suggestions, and requests for the upcoming volumes. We may not be able to fulfill all your wishes but we will surely try. It helps us to know what is needed.

It has been brought to our attention that most of the radios with uPD2824 chip will need a 'SUPER DIODE' for full frequency expansion when using the Kit #106. VCO varactor must be replaced with a 'SUPER DIODE' in some units.

We have been receiving very good reports on the ANTRON "99" base station antenna. Article on page 14.

We are looking forward to another 10 years!

THE SECRET CB GANG

PS: I am truly grateful to all the readers and contributors who have made this 10th anniversay worth celebrating.

THANK YOU!

Doris Selman

TABLE OF CONTENTS

	PAGE
ACKNOWLEDGEMENTS	1
INTRODUCTION	2
TABLE OF CONTENTS	3-4
EDITORS' PAGE	5
CORRECTION FOR VOLUME 21/PAGE 46	6
SCHEMATIC OF 'BLACK CAT' JB76/ME R. F. AMPLIFIER	6
SCHEMATIC OF 'BLACK CAT' JB-12-B/RB R. F. AMPLIFIER	7
SCHEMATIC OF 'BLACK CAT' JB-150B/RB R. F. AMPLIFIER	8
GALAXY 2100 EVALUATION	9-10
SCHEMATIC OF 'BLACK CAT' 150A/RB R. F. AMPLIFIER	10
PARTS SOURCE FOR DOSY & JOE GUNN EQUIPMENT	10
SCHEMATIC OF 'BLACK CAT' JB-ONE-SS R. F. AMPLIFIER	11
'BLACK CAT' LINEAR AMPLIFIERS DON'Ts	12
EXPORT - CB MASTER 2080	13
'BLACK CAT' JB 76/BE R. F. AMPLIFIER SCHEMATIC	13
ANTRON "99" BASE ANTENNA	14
HELP LINE	14
SBE CONSOLE V AND SIDEBANDER V - UPDATE	15-16
KENWOOD TS530 and TS830 - UPDATE	17-18
TRC-453 and PC-122 CLARIFIER MOD	19
KRACO KCB4004 NIS7264B PLL	19
TRC-453/UNIDEN PC-122 PARTS LIST	20
TRC-453 and UNIDEN PC-122 ALIGNMENT PROCEDURE	21-22
CLARIFIER POTS -'CENTER NOTCH REMOVAL'	23
SUPER STAR 360FM CLARIFIER MOD	23
MODIFYING THE JACKSON 'SLIDE'	24
MODIFYING THE SUPER STAR 3600 (LOW BAND) SLIDE	25
UHIC-005 WIDEBANDING FOR 858 CHASSIS	26
SCHEMATIC OF 'BLACK CAT' JB75A R. F. AMPLIFIER	27
REPAIR THOSE WALKIE-TALKIE ANTENNAS	28-30
COLT 355 "SUPER TUNE" UPDATE	30
PACE 8041 (SM5118 PLL) CONV	30
TRC-210 'SKIP' CONVERSION/TUNE UP	31-34
DISCONTINUED TRANISITORS & SUBSTITUTION CHART	35
MAJOR M-120 'ALPHA' CONVERSION/TUNE UP	36-38
ICOM 735 FULL TX COVERAGE	38
MARCO CB-444 'ALPHA' CONVERSION/TUNE UP	39-40
'ALPHA' FREQUENCY CHART	41
"SPECIFIC TUNE UPS: REALISTIC TRC-215/216/417	42
"SPECIFIC TUNE UP: PYRAMID 1300	42
SCHEMATIC OF 'BLACK CAT' JB-12/RB R. F. AMPLIFIER	42
SCHEMATIC OF TRC-216 40 CH WALKIE TALKIE	43
SCHEMATIC OF TRC-215 6 CH WALKIE TALKIE	44
COBRA 20LTD TUNE UP	45
EXCALIBUR SSB CLARIFIER MOD UPDATE	45
HINTS/KINKS/GOOFS/TECH TIPS	46
MICRONTA FREQUENCY COUNTER (RADIO SHACK #22-351)	47
"BEEF THE TUBE"	48

TABLE OF CONTENTS CONTINUED:

	PAGE
TRC-500 SCHEMATIC	49
TRC-500 ALIGNMENT PROCEDURE	50
MOTOROLA MOCAT 40 MICROPHONE REPLACEMENT	51
FULCOMM 2330 (23 ch.) TUNE UP	51
EXCALIBUR SSB POWER SUPPLY REPLACEMENT	52-55
IMPROVING YOUR EARS	56-58
SCHEMATIC OF 'BLACK CAT' JB200A R. F. AMPLIFIER	59
SCHEMATIC OF 'BLACK CAT' JB200A MOBILE POWER SUPPLY	60
SCHEMATIC OF SUPER STAR VOICE SCRAMBLER I	61
SCHEMATIC OF PRYAMID 1300	62
SCHEMATIC OF MIDLAND 77-104	63
SCHEMATIC OF WAWASSEE 'BLACK CAT' FREQUENCY COUNTER	64
INDEX OF SECRET CB VOLUME 1 THRU VOLUME 23	65-72
CORRECTION INDEX	72

****

PW-5000

INLINE WATTMETER

The model PW5000 is a high quality test instrument for measuring the performance of all HF radio stations. The PW5000 simultaneously measures: 1-transmission output power 2-AM percent modulation 3-antenna SWR through 3 separate meters.
The PW5000 employs a newly designed low-loss transient type power meter. It may be permanently kept "in-line" for continuous monitoring.

Description of panel controls

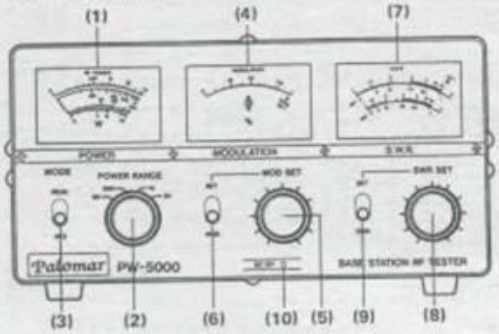

(1) Power meter
Measures RF transmission on four separate ranges 30w, 300w, 1kw, 5kw to full scale.

(2) Power range switch
4 position switch selects any of the 4 power ranges.

(3) Mode switch
Selects either average power (AVG) readings or modulated peak power, PEP (PEAK) readings. PEAK reading is used in SSB or AM mode only.

(4) Percent modulation meter
Displays an AM transmitters percentage of modulation.

(5) MOD SET control
This variable control is tuned when checking percent modulation.

(6) SET MOD switch
Used in conjunction with mode set control to find the percent modulation of a transmitter.

(7) SWR meter
Indicates the standing wave ratio of an antenna system. The H scale is used when the transmission power is in excess of 30 watts and the L scale, when it is below 30 watts. The REF scale (reflected power) measures the ratio of reflected power to SWR.

(8) SWR set control
Used for determining the SWR of an antenna system.

Available from SELMAN ENTERPRISES - 512/853-2935

For an "Editorial", decided to answer a few questions:

1. Why do I write microhenry with a m instead of a u? "uh"; sounds like someone clearing their throat. (Listen to your nightly news on the 'tube' as you will be able to tell when something is being lied about or covered up, with the 'uh'...) I always type the abbreviation for microhenry with the m dropped lower than the h: $_m$h.....
2. The 'Hams' complain that SCB is too easy for the 'jocks' to mess up the units and are having a tough time going back to repair them. "Articles should be more technical, so that units can't be readily converted!" Lack of knowledge is really the main reason that most units are messed up, craftsmanship/and no test equipment is the rest. Why a Ham would want to 'be-little' himself by getting on the C.B. Band is beyond me.
3. How come more conversions on rigs aren't printed? —— Just how many ways is there to cut the feed line to PLL pin/bridge with a resistor/solder a wire directly to pin/then to a switch - which will in turn apply either nothing(normal tracking state), or a 1 or 0 logic state. There must be at least 30 different ways to modify an 02A AM unit printed in SCB, and all are basically the same.
4. The 'Jackson' is off frequency when <u>cold</u>, - right! Solution is simple, leave the radio on; volume down, and squelch at maximum. This way will keep unit warm - prevent condensation build-up. OR, replace the 14.55MHz crystal with a MIL-SPEC temp. type. (NOTE: by COLD, I mean below freezing) The one unit I tested was +5.3KHz from room temperature reading at 18°F.
5. Exports - O.K. - Why do people persist in buying these units with no schematic available? Then will cry to SCB! Most of these units are junk and peddled FAST by the 'distributors'. (So fast, that a unit can't be purchased for evaluation....RE: the Connex in Vol. 23. Seems that a knowledgeable purchaser sent in the true 'skinny' on this unit, and it dryed-up very quick on availability!). Another unit is out now called Galaxy 2100, no schematic on this one either - and dried up fast, this particular unit was supposed to be in the U.S. for 2 months before I even heard of it. (Makes you wonder why?)

CORRECTIONS

Vol. 21, page 46: Change drawing label on coil next to final to L11, instead of L10. See correction below....

Component Side of PCB

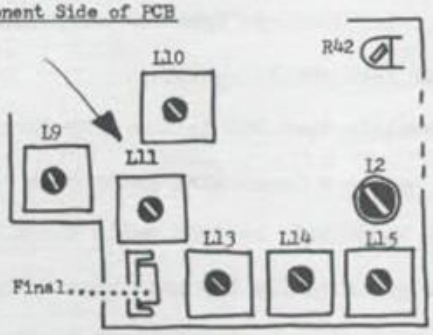

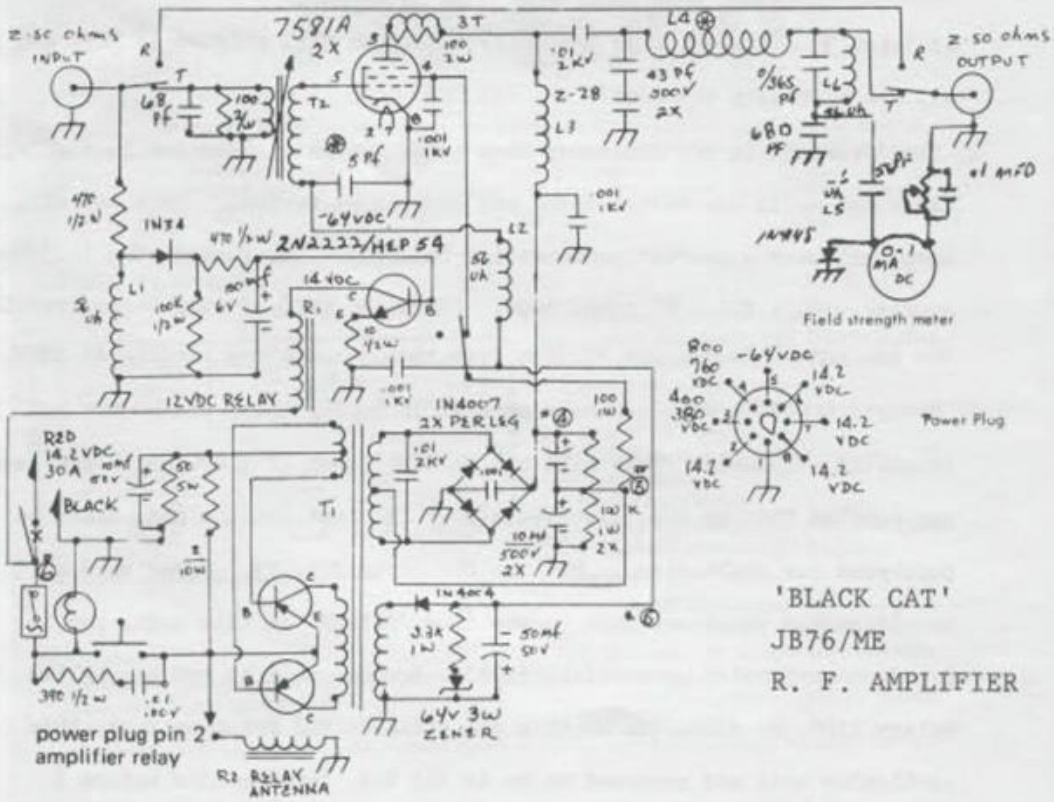

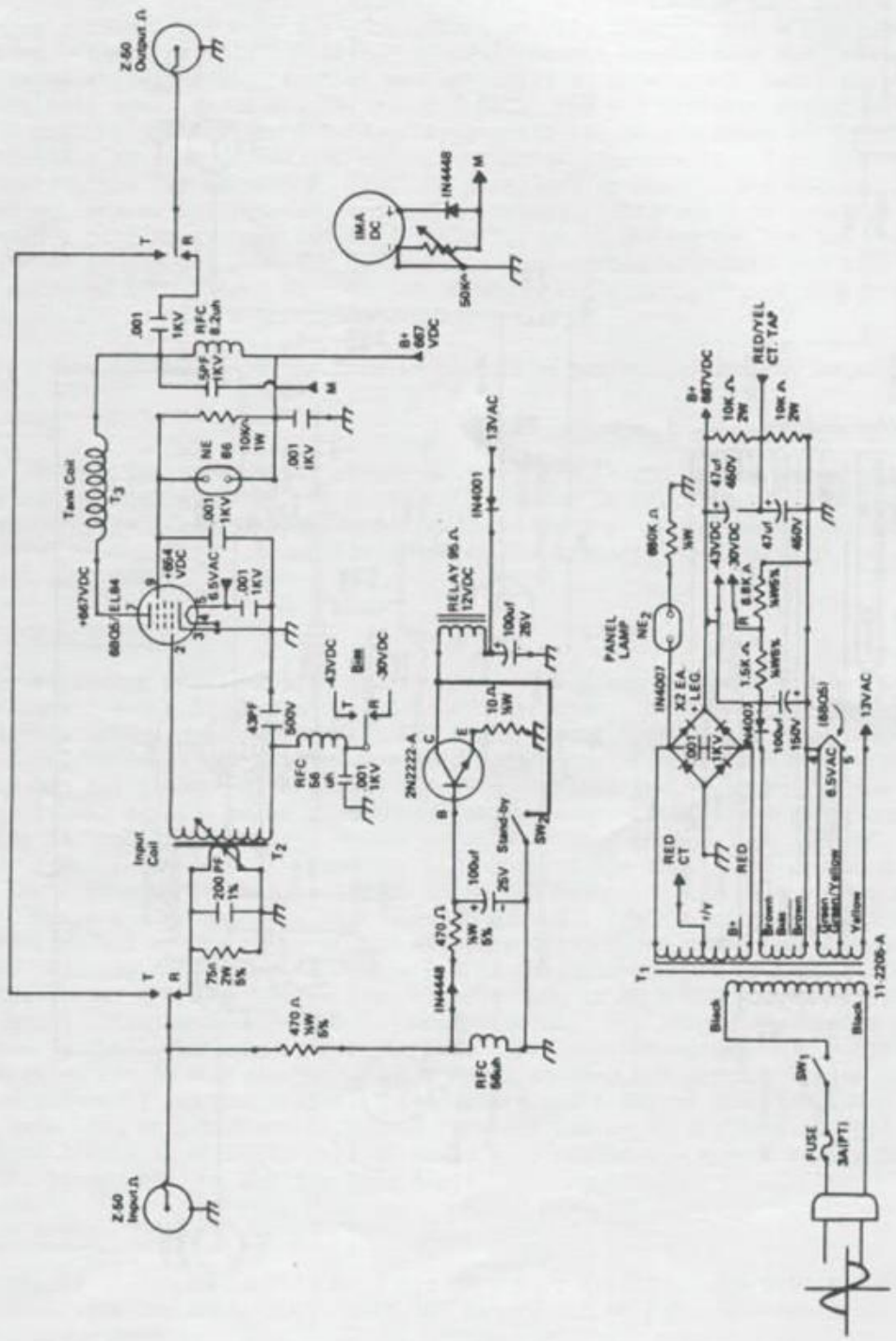

'BLACK CAT' JB-12-B/RB - R. F. AMPLIFIER

'BLACK CAT' - JB-150B/RB - R. F. AMPLIFIER

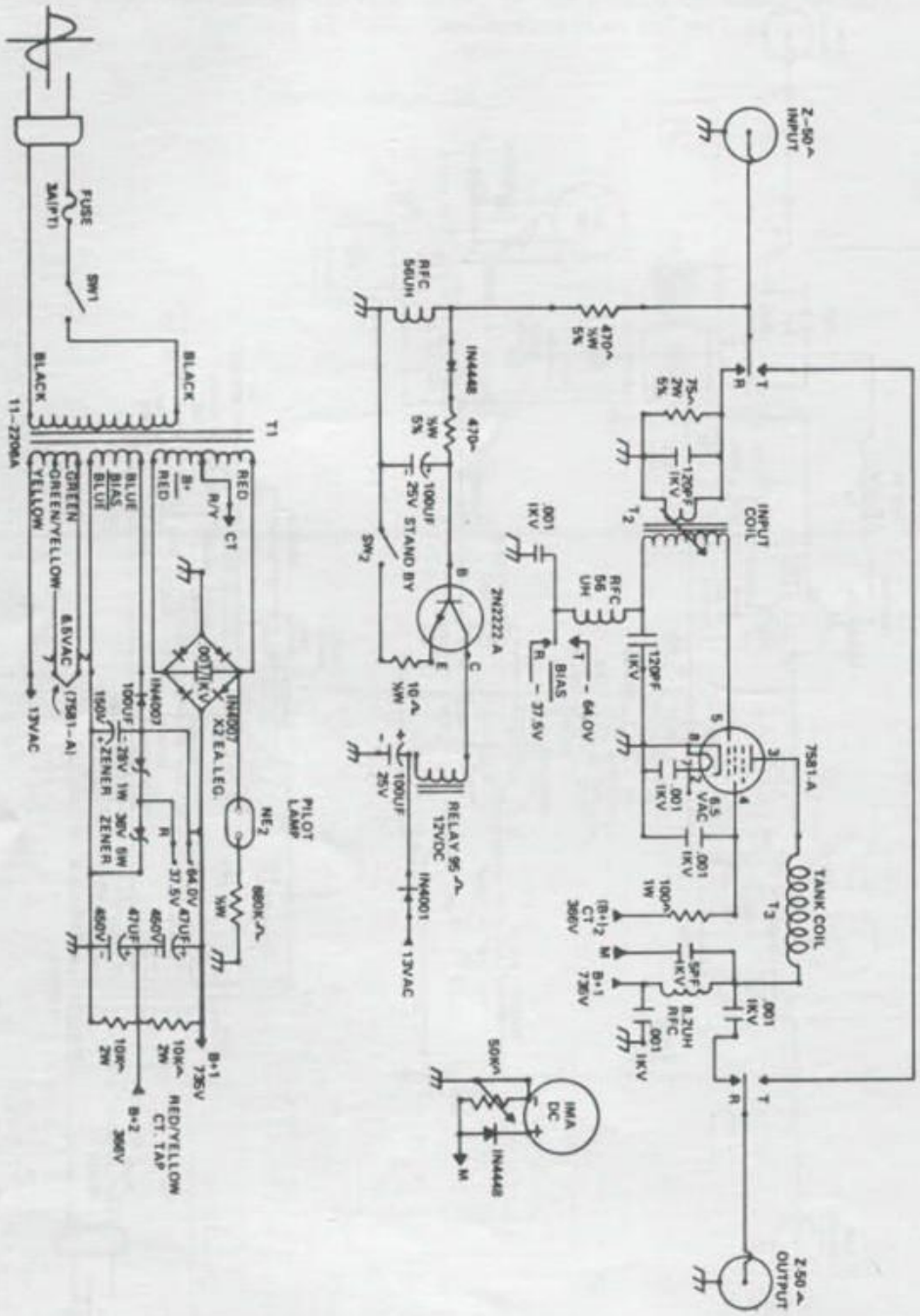

GALAXY 2100

GALAXY 2100

AM/FM/LSB/USB/CW. 271 channels (26,515-28,305) A nice looking unit with a true frequency counter, but only 5 digits. (More on this later). Has a Roger Beep but no switch. Uses the MC145106 chip. Standard output power, good modulation, and power is relatively flat. Another new unit with no schematic! Has a dual clarifier and both track on TX and RX. +/- 7.5 KHZ. Has a 3 position rotary switch and a HI/LO push button for the 6 bands. Apparently the manufacturer of these units has something against 6 position rotary switches. Personally I find this clumsy and inconvenient for switching. Unit is excellent on receive and adjacent channel rejection. Has an SWR function and a Ch 9 switch. (This won't be used and would have made a nice Roger Beep switch.) Also has an ON/OFF switch for the counter. Be prepared to lay out some BUX as Dealer's cost around $250-$260 and will have to be sold for $300 plus. Will be out of most peoples price range but so are Mercedes. All in all, a pretty nice unit.

Received some of the following from an anonymous source and some by experimenting.

Roger Beep

Remove J9 from the front right corner of the board (right behind meter) to de-beep or replace J9 with a switch. CH 9, NB/ANL, counter ON/OFF, etc. Caution....There will probably be a red wire soldered to J9 on the top of the board. It must be resoldered to the front connection of J9 on the front of the board or the counter will not have power.

Frequency Counter

Had the following problems with the counter. Frequency read on freq (at least the 5th digit was a 5) in center detent of clarifier. On TX my bench counter showed unit actually transmitting 1 KHZ high. Reset synthesizer on all Modes and both HI/LO bands and counter now read 1 KHZ low. Removed the cover from the counter box and attempted to adjust the trimmer capacitor on the right end of the board. It was already at max and would only go down. Found that additional trimming is sometimes required on the 10.6975 crystal on the left side of the board. A small cap (4-6 pf) from the high side of the crystal to ground will lower the frequency readout, a 2-6 pf in series with this leg will raise the count. Found a 6 pf cap from high side to ground. Remove this and count went up but was then out of the range of the existing trimmer cap would not come down far enough. Finally replaced this with a 2-8 pf variable cap and mounted it for access from the top of the board. Was then able to tune in AM & LSB but USB still shows 1 KHZ high. This is because USB is uncompensated. The single black wire coming from box is for LSB, the gray wire is AM. Since the counter is only 5 digits it will work ok for AM but without a 100's digit it does not permit precise tuning for SSB operation. I realize that with 6 counters and 6 digits that the 100's digit would have been unstable and flickered from one number to another but this would have been simple to correct. All it would have needed was a counter for the 100's and 10's but no readout for the 10's digit.

Problem Areas

The variable resistors in this unit are very poor quality. Had problems with 3 of them on this one unit. AMC, AM/FM "S" meter, and AM Pwr. You can anticipate some problems here.

GALAXY 2100 continued:

Miscellaneous

If audio quality is poor, remove IC 4 and replace with an ECG 778A. I understand that many of these chips are bad. The Ch 9 switch on this unit stuck in the "ON" position.

Second Unit

Had similar problems on the frequency counter. SWR/CAL switch on this unit sticks. Look for some problems.

Wheras this is a decent unit, with no serious problems, I'm still concerned that no schematic is or will be available. This could cause some problems. Maybe we should ask the Distributor up front if schematics are available for a particular unit. If the answer is "no", maybe our answer should be "no" about buying it!

****

'BLACK CAT' 150A/RB - R. F. AMPLIFIER

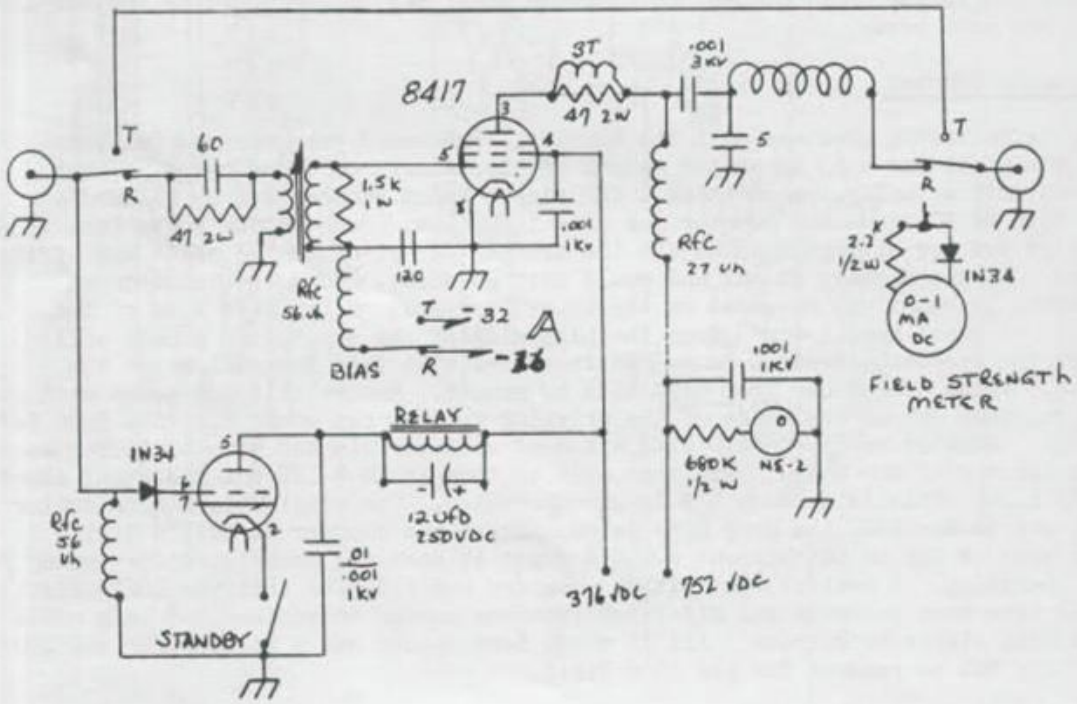

DOSY & JO GUNN PARTS SOURCE

If you have a meter on the outs labeled as above, you're in luck! The manufacturer of these meters is very co-operative. They have a service department, and answered my request for a schematic within six working days.

Elkhart Enterprises Corporation, 25856 Forest Hill, Elkhart, IN 46514

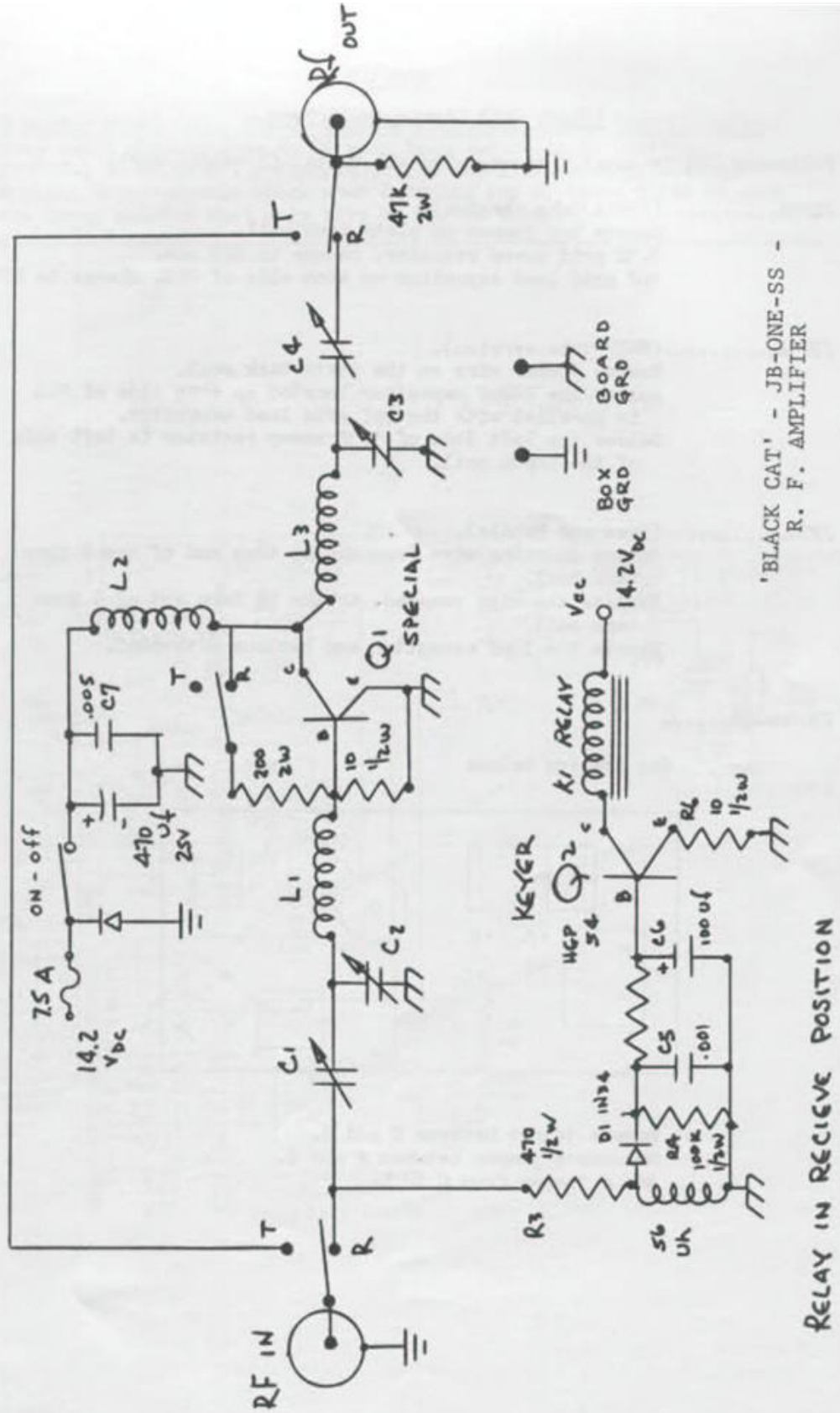
RF OUT
47k 2W
T
R
C4
C3
BOARD GRD
BOX GRD
L3
L2
Q1 SPECIAL
Vcc
14.2Vdc
K1 RELAY
.005 C7
470 uf 25V
200 2W
10 1/2W
ON-off
7.5A
14.2 Vdc
L1
C2
C1
KEYER
Q2
HEP 54
R2 10 1/2W
C6 100 uf
C5 .001
D1 1N34
R4 100K 1/2W
470 1/2W
R3
56 uh
RF IN
'BLACK CAT' - JB-ONE-SS -
R. F. AMPLIFIER
RELAY IN RECIEVE POSITION

"Black Cat" Linear Amplifiers

Following DON'Ts usually accompanied all units. (I wonder why?)

JB75A.....(7581A tube version).
Remove the jumper on plate tank coil.
3.3K grid swamp resistor, change to 820 ohm.
5pf grid load capacitor on etch side of PCB, change to 220pf.

JB75A.....(8417 tube version).
Remove jumper wire on the plate tank coil.
Solder the 220pf capacitor located on etch side of PCB in parallel with the 5pf grid load capacitor.
Solder the left side of 3.3K swamp resistor to left side of the input coil.

JB76.....(Base and Mobile).
Remove shorting wire from the 6½ turn end of the 9 turn tank coil.
Replace the wire removed, to the 2½ turn end of 9 turn tank coil.
Remove the 15pf capacitor and replace with 68pf.

JB-One-SS.....

See drawing below:

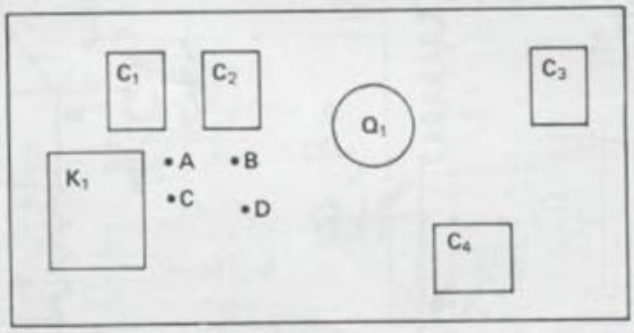

Remove jumper between C and B.
Reconnect jumper between A and B.
Add a jumper from C to D.

EXPORTS

CB Master Model 2080, 80 Ch. AM-Only 26.965-27.855MHz (LC7120-PLL):
Cheap unit! Readout goes to 80 with band switch in Hi position.
IDENTICAL TO MIDLAND 150M(Export)...See for line-up/modification.
(Special Note...double check when ordering any of these units as some are being shipped that only have 40 Ch. in them...)

'BLACK CAT' - JB 76/BE - R. F. AMPLIFIER

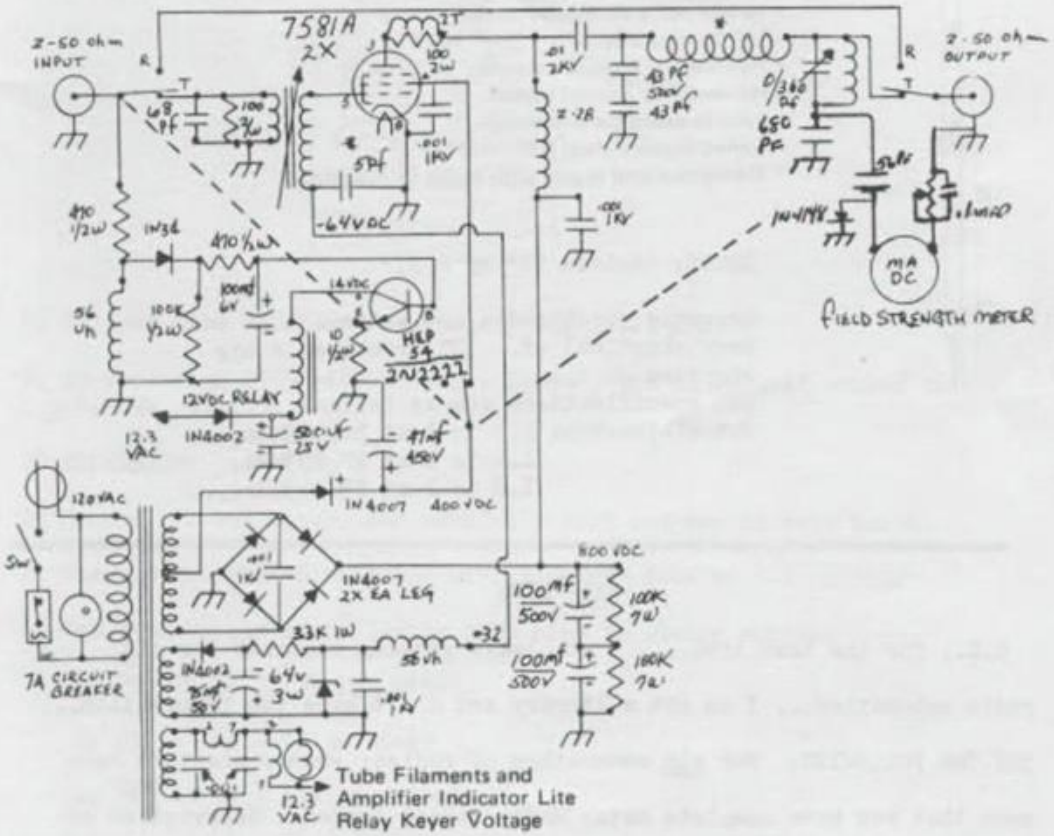

NEW PRODUCT

ANTRON "99"

Omni — Directional Fiberglass C.B. Base Station Antenna

Meets U.S. Government CPSC Shock Hazard Standards

The **ANTRON "99"** is the Mercedes-Benz of C.B. base station antennas — Constructed with quality materials — Quality workmanship — Designed with performance — Second to none

- Protects up to 14,500 Volts
- Twin ring "Adjuct-A-Match" tuning for low S.W.R.
- 18 feet tall, 3 six foot sections
- U.P.S. shippable
- Half-wave C.B. base antenna
- No unsightly ground radials
- Easy to assemble and install
- United States Patent No. 4360814
- Designed and Made with Pride in America

QUOTE: 'Antron 99' by R.S.

Recently purchased a new antenna that was very skeptical of. BUT, received a big surprise -
SWR specifications are as follows.....
Out-of-the-box: 1.2 to 1 at 26.065MHz,
1.4 to 1 at 27.205MHz,
1.8 to 1 at 28.305MHz....

HELP LINE

O.K., for the last time.... I am always getting requests for old radio schematics... I am not a library and don't have the information... TRY THE FOLLOWING: For old schematics of radios; when contacting make sure that you have complete data: Model/Serial Numbers, description of unit and numbers/locations of tubes (NOTE: I have found that units going back 50+ years do merit fixing up!) $$$$.

Supreme Publications
Box 46
Highland Park, Illinois
60035

ISCET Technical Library
8015 Paseo
Kansas City, Missouri

SBE Console V and Sidebander V (SBE-39CB) - UPDATE

by D.G.

For those who happen to have one of above laying around, DUST IT OFF! This new write-up makes it simple to modify....

NO extra resistors, diodes, and transistors - very simple to follow directions.

SLIDE: (Use drawing below for reference..)

1. Cut trace between TX contact on relay and center leg of VR801.
2. Install jumper between the TX and RX relay contacts.

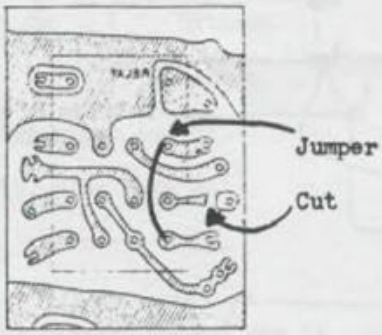

3. "Slide" will now be approximately +1.5, -2.5KHz.
4. By replacing D903 with a 'Super Diode', the slide will expand to ± 4.5KHz.

FO EXPANSION:

1. Remove PLL box cover, and carefully lift out top circuit board.
2. Observe the M58476 chip and wiring points labeled 1-7 on PCB.
3. Cut etch traces of following chip pins to wiring points:
   A. Pin 16 to 7 (Violet wire).
   B. Pin 15 to 6 (Blue wire)
   C. Pin 13 to 4 (Yellow wire)
4. Obtain a dual, 6-position rotary switch; and a SPST miniature switch.

SBE Console/Sidebander V- UPDATE, Cont.

5. Wire-up the dual 6-position switch as below, and install in a convenient location.

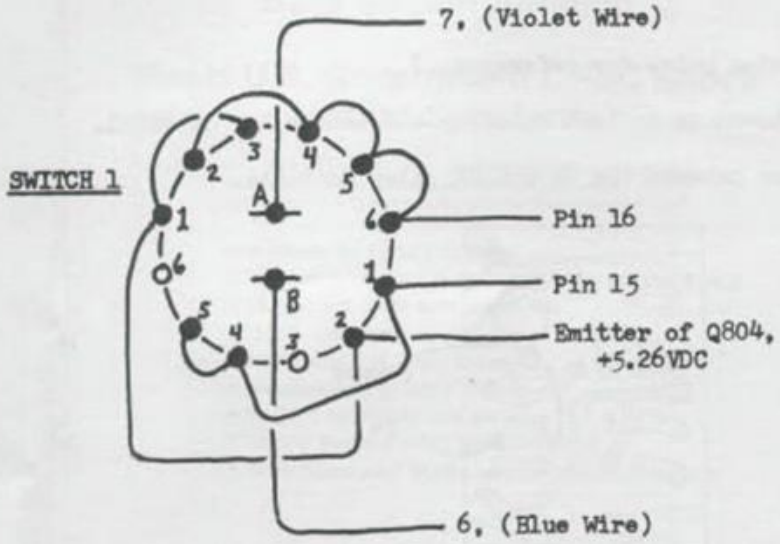

6. Wire-up a SPST switch as below and install per locations marked:

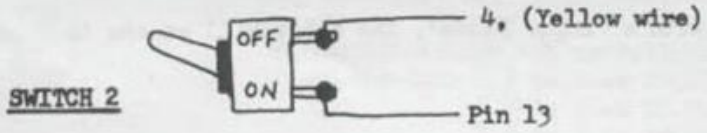

7. Frequencies are per chart below.....

Switch 1 pos.	Switch 2	Ch. Selector	Fo's.
1	Closed	17-40	26.520-26.765MHz
2	Closed	1-16	26.645-26.835
3	Closed	17-27	26.845-26.955
4	Closed	1-40	26.965-27.405
5	Open	33-40	27.415-27.475
6	Closed	17-40	27.485-27.725

8. If needed L902, and L801 may be adjusted in PLL circuitry.

Initial test unit didn't need any adjustment! See SAMS #264 SBE-39CB (Sidebander V), if you run into alignment problems.

Kenwood TS530 and TS830, UPDATE

by G.S.

This conversion allows the readout to correctly track when operating in 11 Meter band.

All modification is accomplished on the Counter Unit PCB.

A 3 pole, double-throw switch is required. Switch may be installed anywhere you desire. BUT, be VERY CAREFUL when working on the PCB.....

A G A I N .....

.....!

1. Lift cathode of D48, clean out hole.
2. Lift cathode of D44, clean out hole.
3. Lift anode of D26, clean out hole.

See switch wiring diagram below, use in conjunction with the schematic diagram.

....Wiring Diagram....

Switch UP is 11 Meter position, DOWN is 10 Meter.

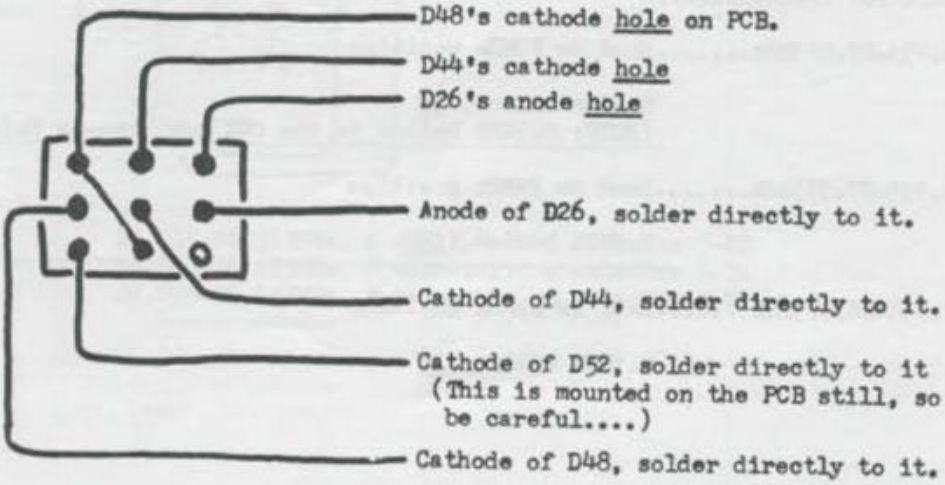

Kenwood TS530/TS830 Update (cont.)....

Schematic of Modification

Double line (≈) denotes break in circuitry connection.

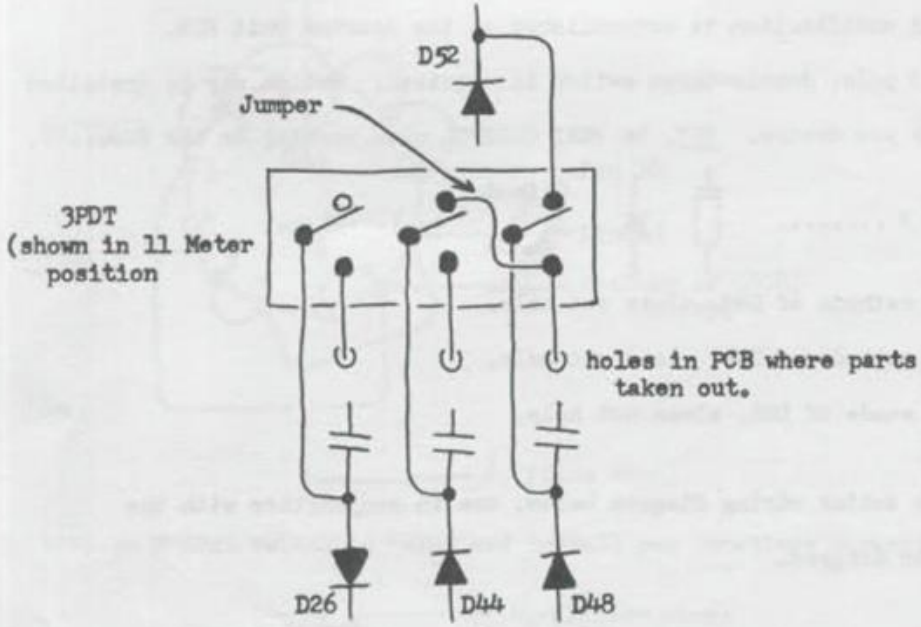

After you have installed the new switch, use the following chart for frequencies...

26.435-27.075MHz.....Band Sw 28MHz position

0.5KHz button, IN
(NOTE: 0.5KHz button in the OUT position-no Fo's.)

26.935-27.575MHz.....Band Sw 29MHz position

0.5KHz button, OUT

27.435-28.075MHz.....Band Sw 29MHz position

0.5KHz button, IN

TRC-453 and PC-122, Clarifier Mod.

by G.L.

SIMPLE and FAST....$$

1. Remove D25.

2. On the Clarifier PCB - NOTE: the 3 potentiometer connections.

   A. Short the bottom to D.C. Ground.

   B. Cut trace to top pin and run wire from it to Pin 3 of IC-4. (ED. NOTE: JP17 should have this voltage source, 8VDC regulated.)

3. If you need more swing change D23 to a "Super Diode".

KRACO KCB4004 NIS7264B-PLL

by J.V.

This particular unit is almost identical to the Orbitsonic 200. Use it as a reference for all tune-up, alignment: Vol. 21, Pg. 37.

For conversion: locate the channel selector PCB, cut traces to Pin 3 and 4 (left to right looking at PCB as below..).

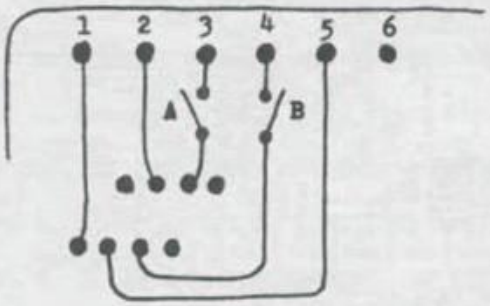

26.055-26.315MHz, A and B Open - selector 5-27
26.325-26.685MHz, A Open..... - selector 1-32
26.695-26.955MHz, B Open..... - selector 5-27

TRC-453/UNIDEN PC-122

PARTS LIST

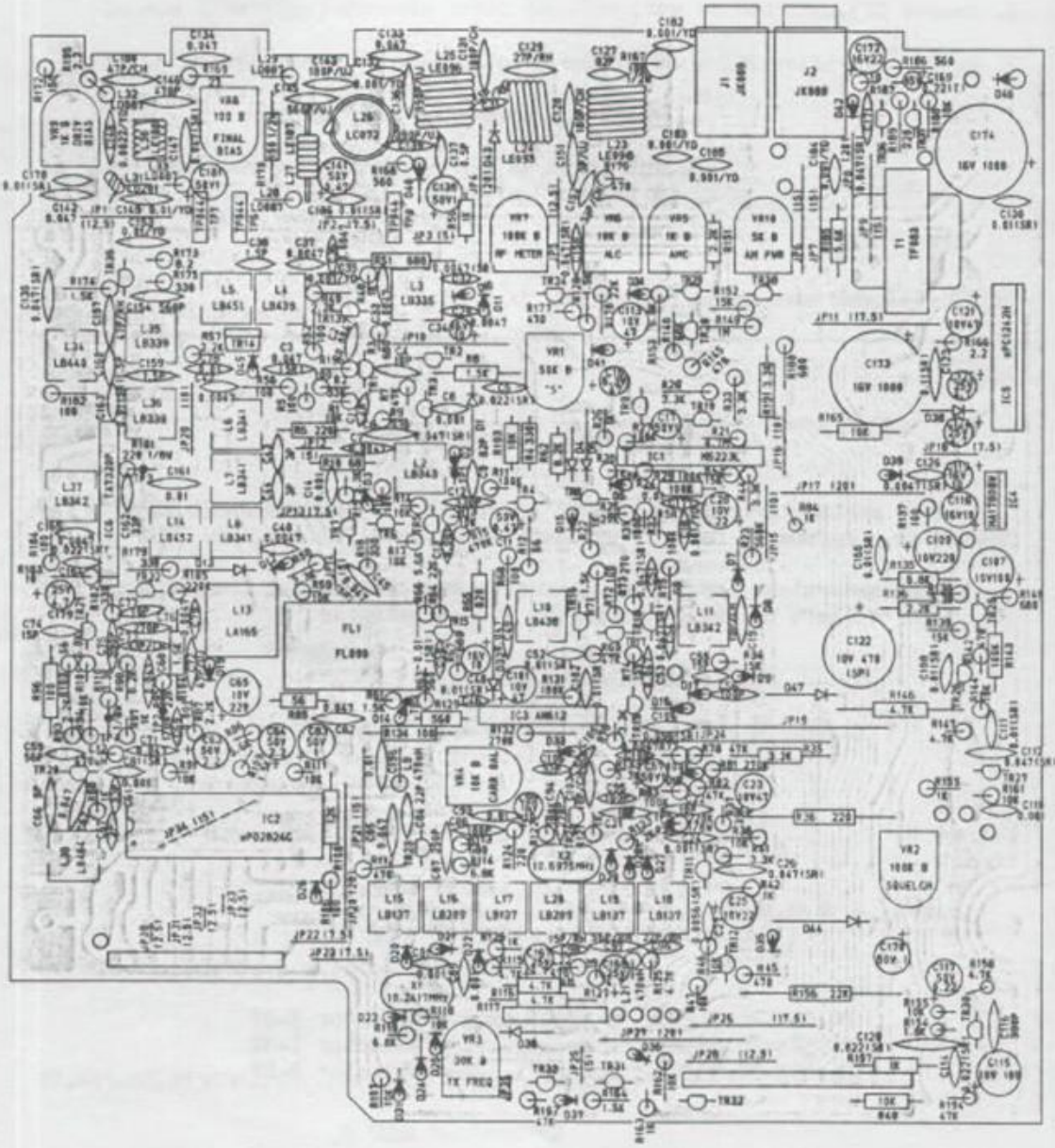

TRC-453 and Uniden PC-122 Alignment Proceedure

This alignment proceedure has been re-written for the "Experienced Tech."

PLL Section: Clarifier centered

1. Ch 40; AM, RX - TP2; adjust L13 for 4.5VDC.
2. Ch 1 - check for more than 2VDC.
3. Ch 19; USB, RX - TP3; adjust L14 for max.
4. Ch 19; USB, RX - TP3; adjust L16 for 16.4925MHz, ±20Hz.
5. Ch 19; AM, RX - TP3; adjust L15 for 16.4900MHz, ±20Hz.
6. Ch 19; LSB, RX - TP3; adjust L17 for 16.4875MHz, ±20Hz.
7. Ch 19; LSB, TX - TP3; adjust VR3 for 16.4875MHz, ±20Hz.
8. Ch 19, LSB, RX - TP5; adjust L20 for 10.6925, ±20Hz.
9. Ch 19; USB, RX - TP5; adjust L19 for 10.6975MHz, ±20Hz.
10. Ch 19; AM, TX (Disconnect "small PCB short board" between TP6, TP7, and TP8.)

    - TP9; adjust L18 for 10.6950MHz, ±20Hz.

TRANSMIT Section:

1. Ch 19; USB, TX (Disconnect "small PCB short board" between TP6, TP7, and TP8.)
   - A. Connect ammeter between TP7 and TP8; adjust VR9 for 40ma.
   - B. Connect ammeter between TP6 and TP8; adjust VR8 for 30ma.
   - C. Reconnect small "PCB short board".
2. Ch 19; USB, TX (VR6 fully CW; 2-tone modulation).
   - A. Ajust L37, L36, L35, L34, and L26 for max RF output
   - B. Balance out Ch 1-40, using L34, L35, and L36.
3. Ch 19; AM, TX (with 1K modulation):
   - A. Adjust L26 for max RF.
   - B. Adjust VR5 for 95-98% TX Modulation.
4. Ch 19; (USB and LSB), TX - Adjust VR4 for minimum carrier leakage on both sidebands.

TRC-453/Uniden PC-122 Align. (Cont.)

TRANSMIT Section:

5. Ch 19; USB, TX (2-tone modulation):

A. Adjust VR6 for 12W RF output

B. Adjust VR7 for 3 lights lit on meter.

6. Ch 19; AM, TX - Adjust VR10 for 4W RF output.

RECEIVER Section:

1. Ch 19, AM, RF Gain-CW, Vol-CW, Sq-CCW, NB/ANL-Off; (2V, 1KHz 30% modulated input to unit).

A. Adjust L11, L10, L8, L7, L6, L5, L4, and L3 for maximum. Balance out across Fo range with L3 if needed.

2. Sq-CW, Sig Gen to 1000mV: Adjust VR2 for audio signal to appear.

3. Sq-CCW, Sig Gen to 100mV: Adjust VR1 for S9 on meter.

4. Step 1 settings (NB/ANL to ON): Scope TP1 and adjust L2 for max.

TRC-453/Uniden PC-122 Alignment Points

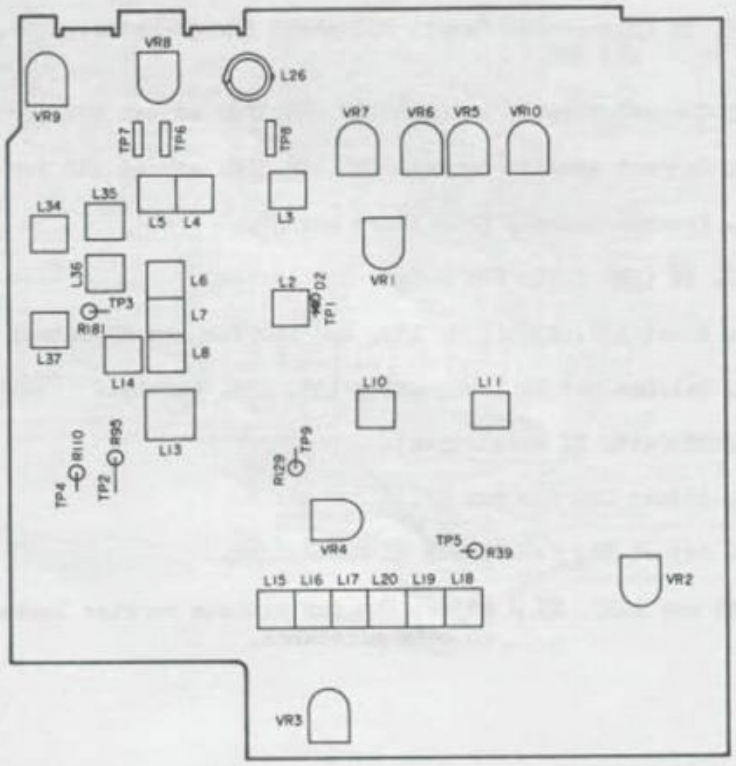

THE C TEAM

Clarifier Pots with "Center Notch" - REMOVAL

Carefully bend up the tabs on pot cover, slide off the top. Remove the metal tab with raised notch, then re-assemble the pot. This is the same method for the 148GTL-DX and Jackson clarifier pots.

SuperStar 360FM Clarifier Mod.

For those who don't like the split operation of RX/TX, or in most cases don't know how to operate.

Use drawings below and re-wire new 20K linear pot to make a standard 'Slider'.

.... Remove all wires from original pot; remove all the wires from PCB; WITH THE EXCEPTION OF YELLOW WIRE-LEAVE.....

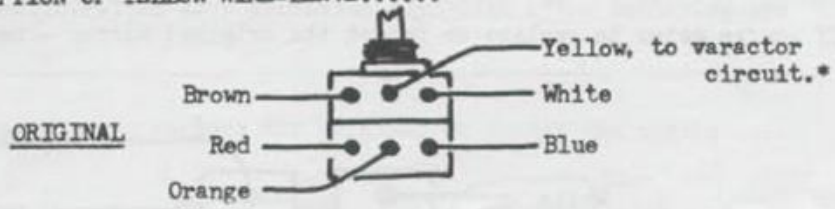

.... Rewire new pot as below; center pot/knob; realign circuitry for AM/FM: Center Fo.; USB +1.5KHz of Center Fo.; LSB -1.5KHz of Center Fo.

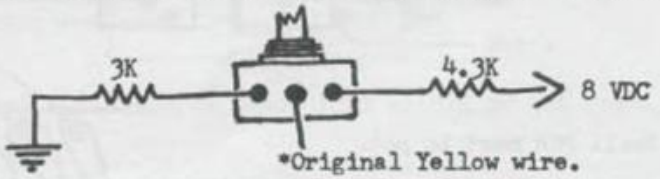

Original wire locations: Red - Fine (L)
Org - Fine (M)
Blue - to RX on PCB, another wire is located in same location but different hole.
White - COSE (H)
Yellow - COSE (M)
Brown - COSE (L)

THE C TEAM

Modifying the Jackson 'Slide'

Remove middle front wire off Clarifier pots (Orange wire), then take the dual pot out of chassis. (Will have to remove chassis screw).
Remove all remaining wires at main PCB and small PCB.

Wire up a new 20K Linear taper pot as below (Physically correct) and install in chassis.

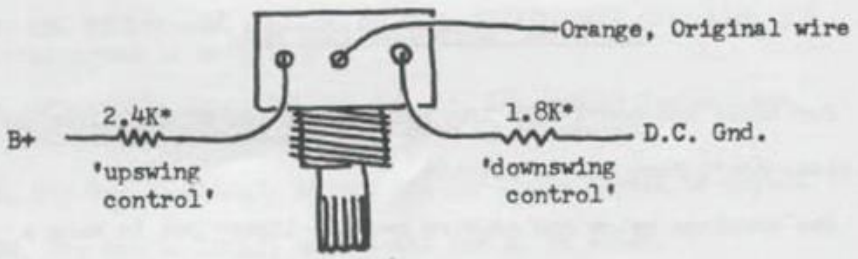

*(Nominal, usually gives ±6KHz after centering knob and realignment, 1.5KHz offset on SSB's.) Without resistors in line will give approx. -10, +9KHz.

If you're going to replace or forget the original wiring - here it is.

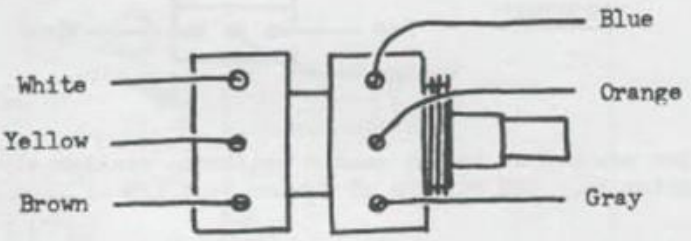

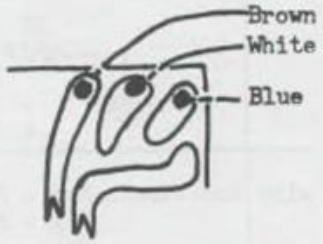

(SMALL PCB LAYOUT)

Blue - Small PCB next to pot.

Gray - COSE-H, on main PCB.

Orange - Hole by R148, main PCB.

White - Small PCB, next to pot.

Yellow - FINE-M, main PCB.

Brown - Small PCB next to pot.

THE C TEAM

Modifying the SuperStar 3600 (Lo Band) 'Slide'

Remove middle front wire off Clarifier pots (Violet wire), then take the dual pot out of chassis. Remove all remaining wires from the PCB.

Wire up a new 20K Linear taper pot as shown below, no resistors are needed to offset ground and B+.

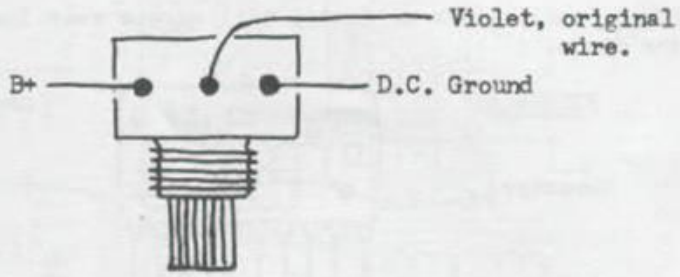

Above configuration gave approximately ±6KHz after centering and realignment.

If you are going to replace the original or forget the wiring.....

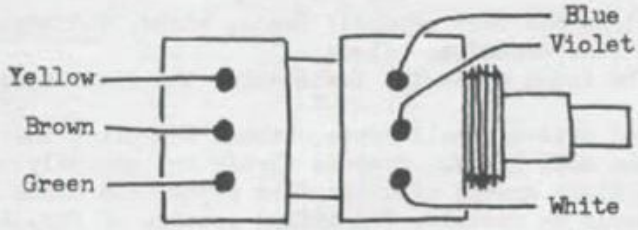

Blue - no numbered hole, next to where R192 should be but isn't.

Violet - #50 on PCB

White - #52 on PCB

Yellow - #51 on PCB

Brown - # 53 on PCB

Green - #54 on PCB

UHIC-005 WIDEBANDING FOR 858 CHASSIS

by LESCOM

1. Carefully remove the UHIC-005 chip from the PCB.

2. Lay the chip - numbers down - on a work surface and locate the present varactor. (See Fig. A)

3. Using sharp knife or dental tool scrape away the brown epoxy covering the diode.

FIGURE A

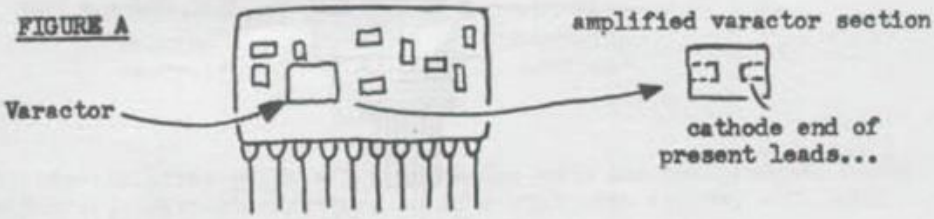

FIGURE B

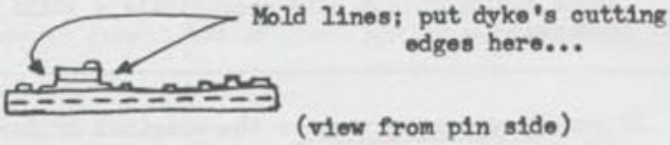

4. Once the diode has been exposed; (ends, sides, and top); look for the molding line around the diode.
   This will be found where the leads enter the diode (see Fig. B.).

5. Using a good pair of small dykes, (about 6") place the cutting edges even with the mold lines. Squeeze firmly and steadily until the top half of the diode cracks off. At this point, the diode leads inside the case should be visible. (amplified section of Fig. A)

6. Carefully lift both leads and scrape the ends gently! Then apply heat and tin the leads. Use a 15W iron!

7. Bend and cut the leads of a Super Diode to fit the exposed leads as shown below. Then solder in place.

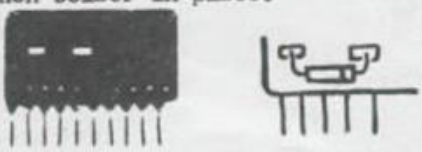

NOTE: Banded end of diode...

8. Re-install the I.C. in unit. The VCO will have to be retuned. But, in most cases the radio will now cover about 3MHz.
   Wide-banding of both the transmit and receive is a must.

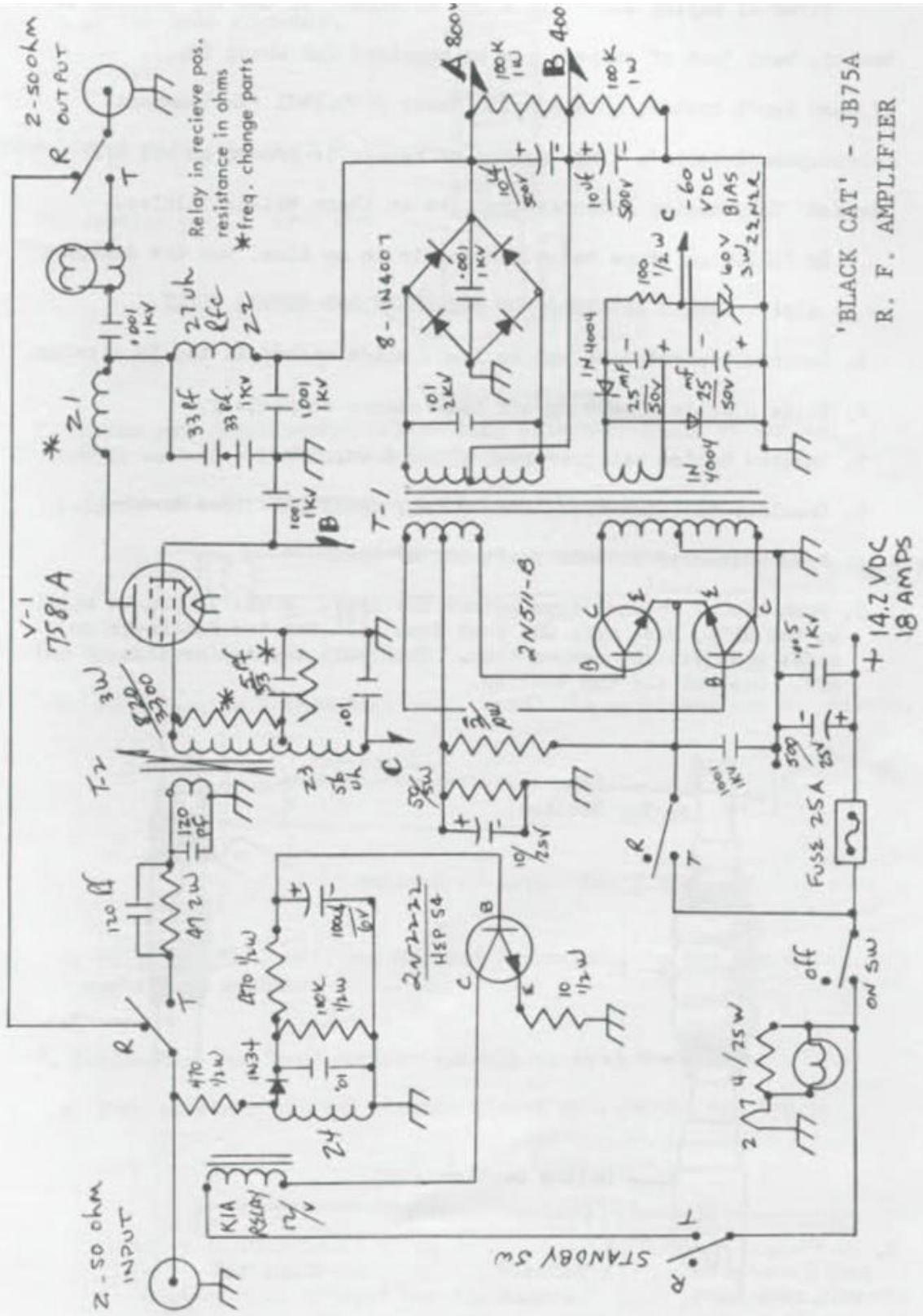
'BLACK CAT' - JB75A
R. F. AMPLIFIER
2-50 ohm OUTPUT
Relay in recieve pos. resistance in ohms
*freq. change parts
V-1 7581A
T-1
T-2
2N511-B
8-1N4007
14.2 VDC 18 AMPS
FUSE 25A
off
on SW
STANDBY SW
2-50 ohm INPUT
KIA RELAY
-60 VDC BIAS SW
1N4004
2N2222 HSP 54

Repair of those Walkie-Talkie Antennas

by B.W.

Tired of paying $16 + for a new antenna? If the top section is busted, bent 'out of shape', can be repaired for about $3....

If load isn't busted, obtain Radio Shack #270-1401 'Replacement Telescoping Antenna'. This method of repair is proven on all R/S 'loaded' Telescoping Antennas that are on their Walkie-Talkies.

By following steps below can repair in no time, use the drawings as an aid! REMOVE ANTENNA FROM EQUIPMENT AND EXTEND FULLY.

1. Unscrew top retainer nut on load, slide up/off if top is missing.
2. Slide plastic sleeve up/off the antenna completely.
3. Unscrew bottom retainer nut, slide down.
4. Unsolder the wire from load to tab, CAREFULLY. (See drawing).
5. Pull bottom of antenna shaft out of load.
6. Push top of antenna down - thru the load. NOTE: If top is still on the whip, bust off; OR; push down till the two retainers on sides come out and remove them. Then pull the top section up and off. Discard old top section.

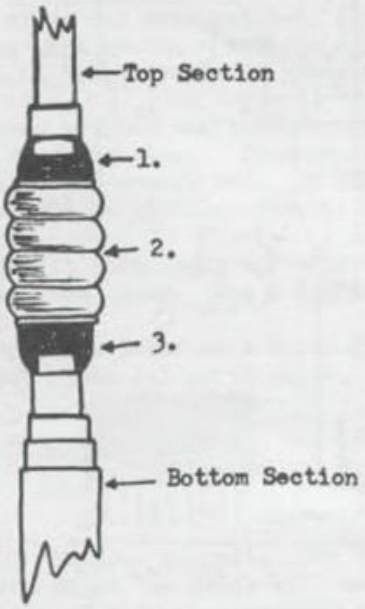

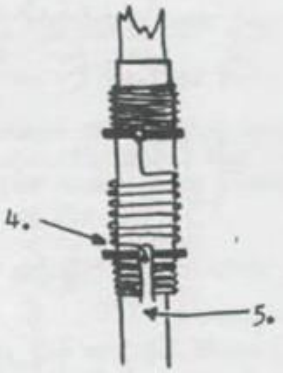

Repair-W/T Antennas (Cont.)

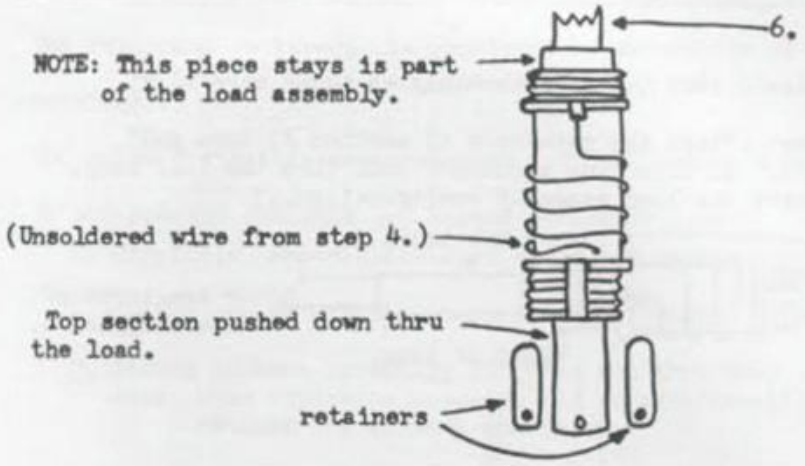

7. On the new 'replacement telescoping antenna'; fully extend and modify as below instructions/drawings;

a. Break off bottom of antenna 2" from the end.

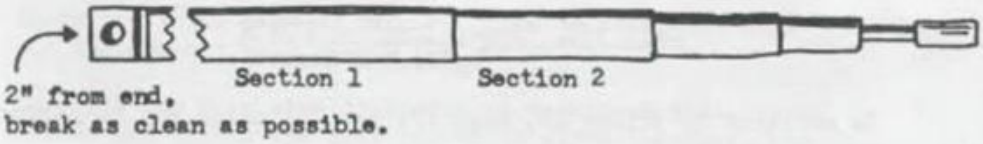

b. Push Section 2 thru Section 1, until the retainers can be removed.

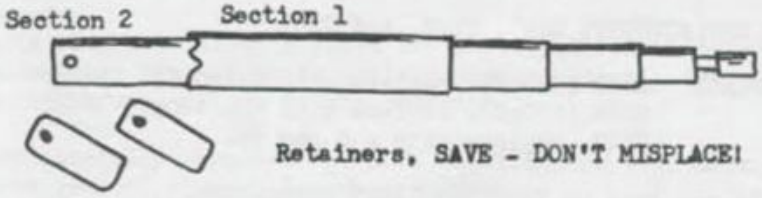

c. Pull Section 1 off, and discard - remainder is the new top portion of antenna.

8. Reassemble the 'new' portion exactly as described/shown:

a. Push retainer nut and plastic sleeve up onto the new top.

Repair-W/T Antennas (Cont.)

8. (Cont.)

b. Push section 2 thru the load assembly as shown carefully!

c. Per drawing; attach the retainers to section 2, then pull to the right. At this time shouldn't pull thru the load assy. (Note: observe the load assembly configuration..)

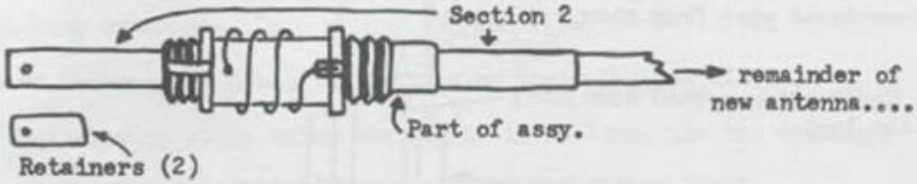

9. Do reverse of tear-down proceedure steps 5 thru 1 for remainder of re-assembly.

Colt 355, "Super-Tune" - UPDATE

by Jerome Horwitz

In addition to Volume 18, page 19; the following may be performed:

ADD: 30pf to etch side in parallel, to C250. Critical, don't remove original part.... just add new capacitance.

REMOVE-NO REPLACEMENT: C249, C247, and C253.

REMOVE-REPLACE: C261 (180pf), replace with a 130pf.
C264 (270pf), replace with the 180pf.
R227, replace with a 1 ohm ½W.

Unit should now tune up to 6.5W+, 100% modulation...

PACE 8041, SM5118-PLL

Fo Conversion: 26.325-26.955MHz

This conversion is fast and easy. (J.V.)

"Cut Pin 11 loose on PLL chip - will give 26.325-26.685, selector 1-32.

Cut Pin 12 loose on PLL chip - will give 26.695-26.955, selector 5-27."

Realistic TRC-210, Conversion to "SKIP" (5KHz Jump)

The following 'write-up' is reprinted by permission of Custom Conversions..

ED. Note: I did this conversion on a TRC-210 about a year ago.

IT IS NOT FOR THE BEGINNER.... Worked perfectly.....

1. Carefully remove black covers and all control knobs.

2. Remove the retaining nut on external speaker jack.

3. Remove antenna carefully and feed out thru Gray top cover.
   Note: When replacing antenna, add an additional lock washer between the antenna and bracket.

4. Remove Gray top carefully; tape the RF/Batt meter in place; don't cover the meter face as is permanent.

5. Cut all cable ties carefully.

6. Cut all wires off the External Speaker jack, trace the Black wire back to PCB and remove carefully.

7. Trace the White wire to PCB, re-route to component side via the cut-out near HI-LOW PWR switch.

8. Re-route the Gray wire to middle of component side. Solder and sleeve the Gray and White wires together, use caution to make sure the Gray wire has enough slack to reach the speaker. Tie up the cable bundle carefully, routing the wires into it.

9. It is advisable at this point to jumper both the speaker and battery pack wires to avoid damaging either. Note locations/wire colors before removing.

10. Very carefully unsolder the R.F. Shielding on etch side, after removal clean all excess solder up.

11. Remove screws from LED display, and move assembly so that the PLL cover may be removed.

12. At this time the following parts will be needed:

Quantity	Radio Shack #	Description
1	275-612	Sub-mini SPST Toggle Sw.
1	272-1340	5-60pf trimmer capacitor
2	272-1014	Axial Elec. Cap., 22MFD/35VDC
1	278-208	Coax Adapter; UHF SO-239 Female
6"	278-1276	2-cond. shielded cable
1	271-050	270K ½W 5% (¼W 5% is O.K.)
1	272-1024	PC Mount Elec. Cap.; 4.7MFD/35VDC
1	272-1420	PC Mount Elec. Cap.; 2.2MFD/16VDC

(NOTE: some of these may be found as junk box items, especially the wire, resistors, capacitors..BUY the switch and rest of components needed as space is critical.....)

Realistic TRC-210, 'SKIP' (cont.)...

13. Use the SO-239 attached to ext. ant. jack for all further adjustments.

14. Do a complete line-up per Factory Service Manual....
If you have a external power supply capable of 1.5Amps at 12VDC; use it at the ext. power jack. Changes to alignment are: Max out power in High position using VR-3, set Low—for about 1½W if it will go that low, using VR-2.

15. Check the modulation on unit, if below 50% in the low power position; remove R-77 (1K ohm, located on RF Power switch PCB).

16. Remove R-30 (100K), and replace with a 270K.
Remove C-26 (3.3Mfd/25VDC) and replace with a 4.7Mfd/25VDC; observe the correct polarity on this capacitor when replacing; the positive lead goes to DC Ground! Check out the noise level, should have improved it by 100%.

17. If noise is still a factor replace R-30 again by going to a higher resistance. Some unit require going as high as 560K and also changing C-26 to a higher value of 6.8Mfd. Nominal values were listed in Step 16, as any high does diminish the audio too much.

18. Remove C-30 (10Mfd/16VDC), and replace with a 2.2Mfd/16VDC. This changes the ON time of the LED display to about 1/3 the original, and saves on battery drain. If you want to increase the on time-increase the capacitance, or solder the two wires on switch together to have it permanently on.

19. For high frequency filtering the 2 - 22Mfd axial capacitors may be wired across the speaker terminals. (a single non-polarized electrolytic may be used in place, do not use under a 15VDC rating! Insulate leads and tape to case, see wiring below:

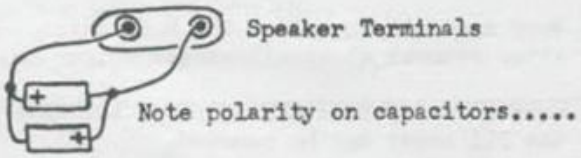

20. Unit is now ready for frequency modification; turn the channel selector to 19..

21. Remove very carefully C-33 (33pf) from PCB, clean out the holes!

22. Key up and adjust TC-1 for 27.190MHz on transmit.

23. Build the switch kit on next page exactly as diagramed, do not deter in any fashion from this point on.....

Realistic TRC-210, 'SKIP' (cont.)...

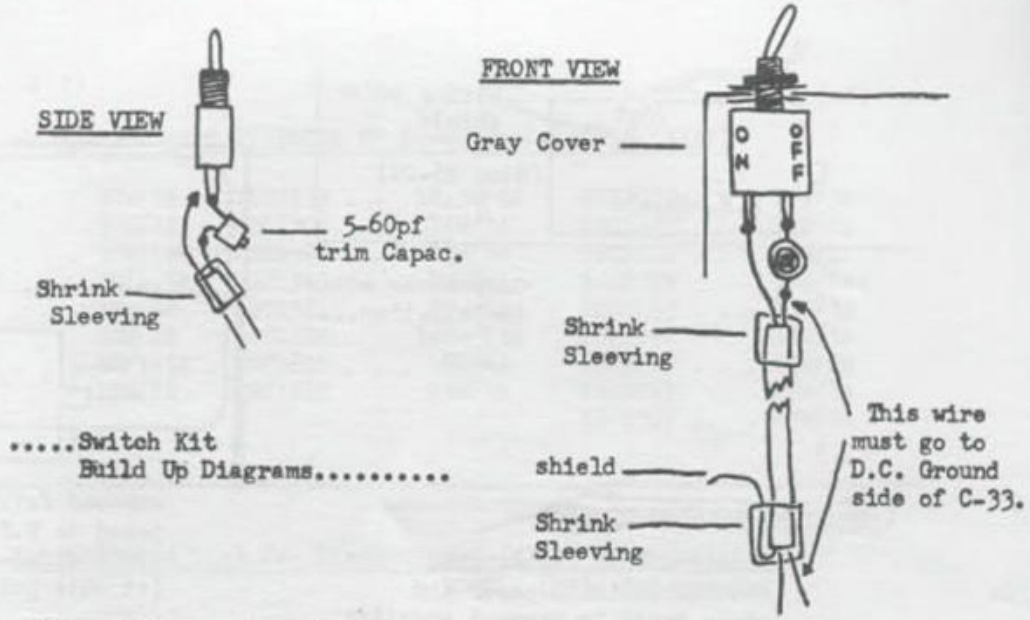

.....Switch Kit
Build Up Diagrams.....

24. After making up the kit above, pre-tin the left over wires. Feed the cable into the chassis hole and feed up to etch side of the PCB. Note: Be sure to have the adjustment screw of the capacitor facing toward the etch side.

25. Do not push the Gray case straight on, as may have to fit the new switch with capacitor through the old space where the ext. spkr. jack was. In most cases will have to move the coil coming from the ext. mike jack out of the way - just be sure it doesn't short to D.C. ground.

26. Solder the wire coming from capacitor to the D.C. Ground hole. (Stick the wire in hole then solder carefully, all of this to be done on the etch side where C-33 removed).

27. Solder the wire coming directly from the switch to the other hole in same manner.

28. Solder the RF shield back in place at all former places, with the exception of where the new cable located. (Note: make sure the RF shield is insulated on the bottom side, some are not!)

29. Solder the cable shield to the top of RF Shield. Don't push the Gray top all the way on yet, unless it will leave room to reach the capacitor for tuning. If it does-push it in place, and install the screws.

30. Key up unit with the switch towards outside of cover, should transmit at 27.190MHz. Push switch in should read-who knows-? but tune the new capacitor until you get 27.185MHz. Switch back and forth to make sure it stays steady; then put the cover back on PLL cage; re-check the transmit frequencies and readjust if necessary.

Realistic TRC-210, 'SKIP' (cont.)...

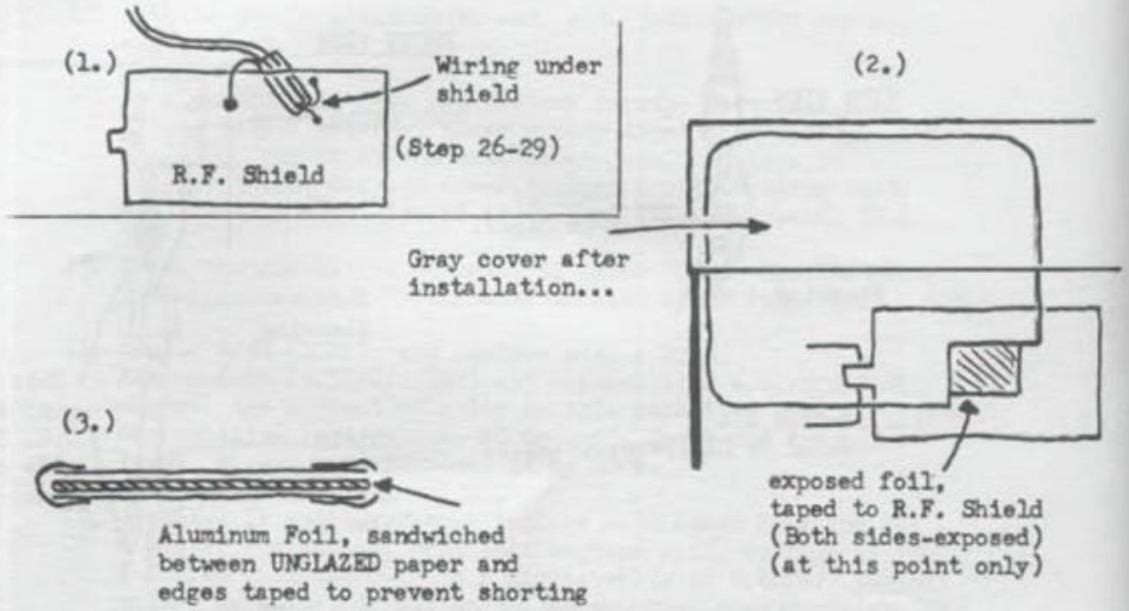

31. If you haven't put the gray cover on do it now, use caution and don't tighten down the screws too tight as will break plastic.

32. An extra shield must be made and installed before putting the antenna back into unit. It is installed as in Drawing #2, and constructed per Drawing #3. The newly made shield will be taped to the existing RF shield. (Note: The shield is made to fit between the new capacitor/cable and antenna, to prevent RF Feedback upon transmit).

33. Once the shield is installed; carefully push the antenna back into the case; the shield will require pushing down to fit properly.

34. When re-installing the antenna, don't forget to add a lock washer between the antenna and frame.

35. Remove the SO-239, and test the transmit frequency to see that there is no change in either switch position.. There should not be any! If there is - the shielding is insuffient or you installed it wrong.

Remember: Switch Inward-Regular C.B. Frequencies..
Switch Outward-Transmit and Receive Frequencies are both altered by 5KHz upwards of the original selector frequency. (In-between operation)

THE C TEAM

Discontinued 27-50MHz RF Power Transistors (EIAJ)

2SC765 . . .	30W/2A	2SC1239 . .	12.5W/4A	2SC1909 . . .	10W/3A
2SC766	30W/2A	2SC1306	12W/3A	2SC2020	12W/2A
2SC767 . . .	30W/2A	2SC1307 . . .	25W/8A	2SC2028 . . .	5W/1.5A
2SC803	5W/1.5A	2SC1377	20W/6A	2SC2029	10W/2A
2SC851 . . .	75W/8A	2SC1581 . . .	80W/7A	2SC2043 . . .	25W/8A
2SC865	20W/2A	2SC1582	140W/13A	2SC2092	12W/3A
2SC866 . . .	5W/1.5A	2SC1816 . . .	16W/4A	2SC2207 . . .	25W/8A
2SC1237	10W/2A	2SC1817	25W/5A	2SC2297	25W/8A
				2SC2397 . . .	25W/8A

Substitution List for Discontinued (EIAJ) RF Transistors

NOTE...(EIAJ Recommended)

2SC765 . . 2SC647,
2SC766 2SC901,
2SC767 . . 2SC901,
2SC803 2SC756A, 2SC513, 2SC1226A,
2SC851 . . 2SC1192,
2SC865 2SC551, 2SC691,
2SC866 . . 2SC1239,
2SC1237 2SC756, 2SD600, 2SC1816, 2SC1678, 2SC1239,
2SC1239. . 2SC756, 2SC1816, 2SC2075, 2SC2166,
2SC1306 2SC1678, 2SC1528,
2SC1307. . 2SC2098, 2SC1177, 2SC1969,
2SC1377 2SC2098, 2SC1298, 2SC1239,
2SC1581. . 2SC1763,
2SC1582 2SC1764,
2SC1816. . 2SC2078, 2SC2075, 2SC1975, 2SC1964,
2SC1817 2SC2078, 2SC2099, 2SC2050, 2SC2312, 2SC1969,
2SC1909. . 2SC2078, 2SC756A, 2SC1816, 2SC2075, 2SC1974, 2SC2166,
2SC2020 2SC2075, 2SC1974, 2SC2166,
2SC2028. . 2SC2314, 2SC1760, 2SC2036, 2SC1957, 2SC1018, 2SC2086,
2SC2029 2SC1816, 2SC2075, 2SC1974, 2SC2166,
2SC2043. . .....None known - Fujitsu is original manufacturer..
2SC2092 2SC2075,
2SC2207. . 2SC2098,
2SC2297 2SC1817, 2SC2099, 2SC2050, 2SC2312,
2SC2397. . 2SC2078, 2SC1817, 2SC2562, 2SD568, 2SD812,

Note: Some of the substitute replacements are in the discontinued list also...

Major M-120, Conversion to 'ALPHA'

Reprinted by permission of 'Custom Conversions'

1. Remove covers; mark location of color-coded wires going to speaker; then pull the connectors off. All further work on unit is done with external speaker. Use a dummy load when tuning.....

2. Locate D-1; is found in front of L-1. Carefully remove-clean out holes.

3. Replace D-1 with the 'Super Diode', DO NOT apply excess heat when soldering!

4. Check unit to see that all present frequencies are still operational.

5. Follow diagram below for modification of L-5. Cut etch and jumper where indicated. (All this is done on the etch side of PCB!)

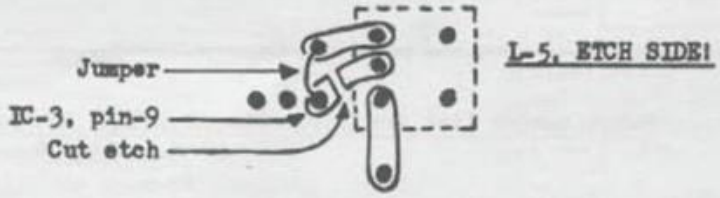

6. Follow diagram below for PLL Chip modification. Cut etch completely and make sure Pin 8 is completely isolated from D.C. Ground. Then install a 5.1K ohm, 1/4W, 5% resistor as shown. (Note: Pt.s A & B, as will use in later steps)

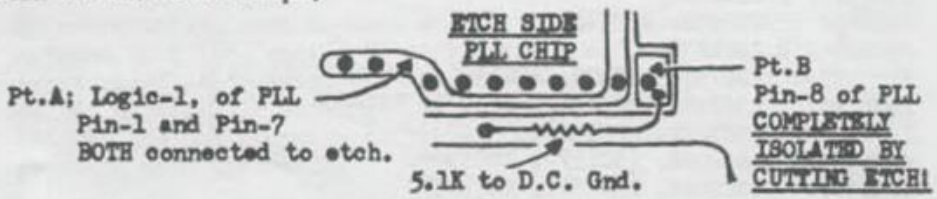

7. Check unit again, see that all present frequencies are still operational.

8. Locate the pull switch portion of the RF Gain Pot/Switch. There are no wires soldered to it, so is utilized to switch logic to Pin 8 of PLL.

9. Using the diagram below, and Step-6: Solder wires from Pt. A to Pt. A, and Pt. B to Pt. B. (Caution: Pre-tin wires before soldering to chip)!

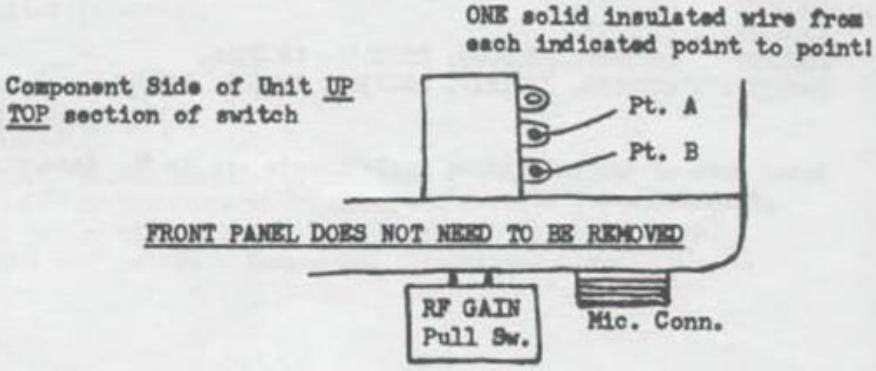

Major M-120, 'ALPHA' (cont.)

10. When you have completed the wiring, and tied-up into the bundle any excess!

11. Push switch IN, and check all frequencies! (At this time you may align L-5 for peak power at 26.965). Re-check to make sure the top Fo is OK..

12. Go to 27.865, (Hi Band, 1); pull switch out - should now have 26.585.. If not re-align L-1 slightly until it comes up. If it doesn't come up try a 'slight' re-alignment of L-2... (NOTE: In 8 different units have only had to adjust L-2 in 3 of them.)

13. Using the new 'Alpha Fo Conversion Chart'; for switching and outputs: Adjust L-1, L-2, T-2, and L-5 at this time only to get all the frequencies up. Don't bother adjusting for maximum power at this time!

14. When all the Fo's from 25.685 to 28.305 are obtained you then adjust the following for PEAK LINEAR POWER. (As flat as possible across the whole band). Adjust T-4, L-7, L-11, and L-12.

15. IN SOME CASES: L-1, L-5, L-7, L-11, and L-12 must all be used and the last 3 adjustments slightly 'stagger-tuned'.

16. With NO changes in the RF Power section; all units worked on achieved a minimum of 4W across the whole band. By taking your time, can get it to do 5W with no trouble...

17. If you are slightly off-frequency, the small capacitors next to the crystals will get you back on.

18. The receive is no problem in this unit. If you want may 'peak-tune' T-9 and T-10. Use a RF Sig Gen and 'stagger-tune', T-6, L-14, and and T-7. (Have not found this necessary in any unit to date!)..

19. If you have to only...T-6 may be broad-banded by moving input to the 'un-used leg' of coil, and cutting the etch to center. See below..

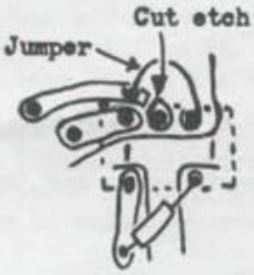

T-6, ETCH SIDE...

20. Additional adjustments: RV1-Sq Rng; RV2-AMC (DO NOT DEFEAT); RV3-S Mtr; RV4-RF Mtr; There is one additional adjustment pot located on small PCB.
*This is for FM deviation - IF YOU DON'T HAVE THE EQUIPMENT TO ALIGN--STAY OUT OF CIRCUIT! The two coils are for FM-RX. (Techs. Deviation should be 1.7KHz.)

Major M-120, 'ALPHA' (cont.)

21. Rejection Was A Problem ! Remove the 455KHz filter (CF2); obtain another from local electronics outlet; or from a 'junked' out C.B.

22. Glue or tape the two filters together, then re-wire as below.

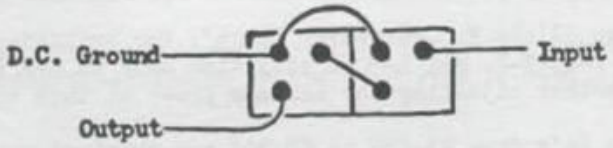

23. Carefully reinstall the new filter on the component side in the cleaned out holes as follows below:

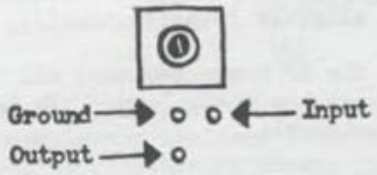

ICOM 735, Full TX Coverage

G.L.

"A Beauty of a Unit!" ..... Carefully follow directions for full TX coverage:

1. Remove Top cover.
2. VERY CAREFULLY, remove P.A. unit and lean to one side.
3. Approximately 2" from front center and 'hair' to left, you will find D34 and D35.
4. Carefully remove or clip.
5. Replace the P.A. unit being careful not to pinch any wires.
6. Replace the top cover.

Unit will now transmit over the entire readout range.....

Marko CB-444, Conversion to 'ALPHA'

Reprinted by permission of 'Custom Conversions'

1. Remove covers; mark location of color-coded wires going to speaker; then pull the connectors off. All further work on unit is done with external speaker. Use a dummy load when tuning....

2. Locate D-1; is found in front of L-1. Carefully remove, clean out holes.

3. Replace D-1 with the 'Super Diode', DO NOT apply excess heat when soldering!

4. Check unit to see that all present frequencies are still operational.

5. Follow diagram below for PLL Chip modification. Cut etch completely and make sure Pin 8 is completely isolated from D.C. ground. Then install a 5.1K ohm 1/4W, 5% resistor as shown. (Note: Pt.s A & B, as will use in later steps.)

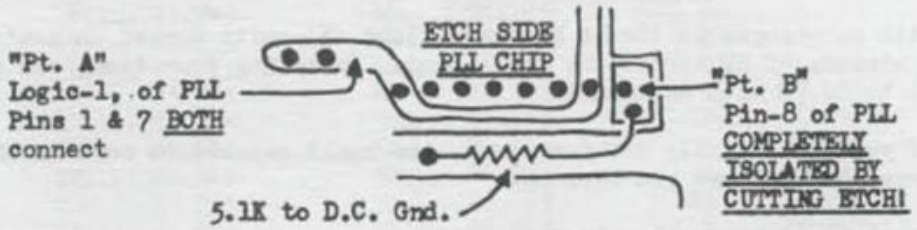

6. Check unit again, see that all present frequencies are still operational.

7. Locate Orange wires (2) on the ANL/NB switch. Trace both back to source; one should go to standoff #41 - remove wire from standoff. The other should trace to Hi/Mid/Lo switch - cut this OFF at the ANL/NB switch.

8. Locate the Grey wire on ANL/NB switch - trace back to source, should go to standoff #31. Remove from standoff.

9. Re-route both 'long wires taken off standoffs' to etch side of PCB. Cut to length so that the Orange will go Pt. A, and Grey to Pt. B. Solder in place carefully. (See Step 5 for Pts A & B.)

10. Re-route the short Orange wire up to component side of chassis. (Optional-you might want to replace this wire at the Hi/Mid/Lo switch, as will require splicing to reach standoff #31.) If not; splice/sleeve another piece of Orange wire to existing; re-route to standoff #31 and SOLDER to it.

11. Solder another piece of Orange wire from standoff #31 to standoff #41.

12. Tie up all wires in the cable sheath, including those re-routed to PLL.

13. ANL/NB switch to ANL: re-check all present frequencies. Switch to NB, Channel 1, Low - should have 25.685MHz. If not re-tune L-1, SLOWLY, a maximum of ¼ turn CW or CCW. If it doesn't come up try a 'slight' readjustment of L-2.. (L-1 and L-2 are used to get the frequency coverage at this time.)

Marko CB-444, 'ALPHA' (cont.)

14. Using the 'Alpha Frequency Chart'; for switching and outputs: adjust L-1, L-2, and T-2 at this time only to get all the frequencies up. Don't bother adjusting for maximum power at this time!

15. When all the Fo's from 25.685 to 28.305 are obtained you then adjust the following for PEAK LINEAR POWER. (As flat as possible across the whole band.) Adjust T-3, T-4, L-7, L-11, and L-12.

16. Be careful that the top or bottom frequencies don't fall out drastically! In some cases, L-1, T-2, T-3, T-4, L-7, L-11, L-12. (L-1 is very critical to broadbanding!).

17. If linear power output can't be obtained. L-7, L-11, and L-12 will have to be 'stagger-tuned'. (This has had to be done on only 20% of all units worked on so far.)

18. With no changes in the RF Power section; all units worked on achieved a minimum of 6W across the whole band. By taking your time, can get it to do 7W with no trouble.

19. If you are slightly off-frequency, the small capacitors next to the crystals will get you back on.

20. Receive was no problem in this unit!

21. Rejection Was A Problem ! Remove the 455KHz filter (CF2); obtain another from local electronics outlet; or from a 'junked' out C.B.

22. Glue or tape the two filters together, then re-wire as below.

23. Carefully reinstall the new filter on the component side in the cleaned out holes as follows below:

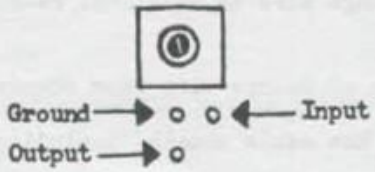

24. Additional adjustments: RV1-Sq Rng; RV2-AMC; RV3-S Mtr; RV4-RF Mtr. There is one additional adjustment pot located on small PCB. (Techs, this is for deviation 1.7KHz, the two coils are for FM Rx.)

'ALPHA' Frequency Chart

Major M-120..... Frequencies are switched IN, when the RF GAIN switch is pulled out.

Marko CB-444..... Frequencies are switched IN, when ANL/NB switch is in the NB position.

LOW BAND		MID BAND		HI BAND	
Selector	Frequency	Selector	Frequency	Selector	Frequency
1	25.685MHz	41	26.135MHz	1	26.585MHz
2....	25.695	42....	26.145	2....	26.595
3	25.705	43	26.155	3	26.605
4....	25.725	44....	26.175	4....	26.625
5	25.735	45	26.185	5	26.635
6....	25.745	46....	26.195	6....	26.645
7	25.755	47	26.205	7	26.655
8....	25.775	48....	26.225	8....	26.675
9	25.785	49	26.235	9	26.685
10....	25.795	50....	26.245	10....	26.695
11	25.805	51	26.255	11	26.705
12....	25.825	52....	26.275	12....	26.725
13	25.835	53	26.285	13	26.735
14....	25.845	54....	26.295	14....	26.745
15	25.855	55	26.305	15	26.755
16....	25.875	56....	26.325	16....	26.775
17	25.885	57	26.335	17	26.785
18....	25.895	58....	26.345	18....	26.795
19	25.905	59	26.355	19	26.805
20....	25.925	60....	26.375	20....	26.825
21	25.935	61	26.385	21	26.835
22....	25.945	62....	26.395	22....	26.845
24	25.955	64	26.405	24	26.855
25....	25.965	65....	26.415	25....	26.865
23	25.975	63	26.425	23	26.875
26....	25.985	66....	26.435	26....	26.885
27	25.995	67	26.445	27	26.895
28....	26.005	68....	26.455	28....	26.905
29	26.015	69	26.465	29	26.915
30....	26.025	70....	26.475	30....	26.925
31	26.035	71	26.485	31	26.935
32....	26.045	72....	26.495	32....	26.945
33	26.055	73	26.505	33	26.955
34....	26.065	74....	26.515	34....	26.965
35	26.075	75	26.525	35	26.975
36....	26.085	76....	26.535	36....	26.985
37	26.095	77	26.545	37	26.995
38....	26.105	78....	26.555	38....	27.005
39	26.115	79	26.565	39	27.015
40....	26.125	80....	26.575	40....	27.025

SPECIFIC TUNEUPS

Realistic TRC-216, 40 Ch. Walkie-Talkie; 21-1663 (TC9109BP-PLL).
No big advantage over previous model except for smaller physical size. VR1-Sq Rng, VR2-Low Pwr modulation adjust, VR3-High Pwr modulation adjust. RX: T1, T2, T3, T4; C23-(3.3Mf/35VDC) may be increased in value for improved ANL. CF2 can be doubled/tripled up for rejection.
TX: T6, T7, T8, T9, L6, VR4, L9, and L10. Use a field strength meter when tuning for max power/modulation in low power mode. AMC defeat is C80 (1MF/50VDC).

Realistic TRC-215, 6-Ch. Walkie-Talkie; 21-1653. Physical size is again the only difference between this and last model.
VR1-Sq Rng, VR2-Low Pwr modulation adjust, VR3-High Pwr modulation adjust. RX: T1, T2, T3, T4; C24-(3.3Mf/25VDC) may be increased in value for improved ANL. CF2 should be doubled only for rejection improvement IF needed. TX: T5, L3, VR4, L6, and L7. Use field strength meter when tuning transmit in low power mode.

Realistic TRC-417, (LC7132-PLL). Another new unit, nothing spectacular. Alignment 'Tune-up': peak in receive mode T1, T2, L5, L6, T3, T4, and T5. C31 (1Mf/50VDC), may be changed to higher value for more efficient noise limiting. CF-1 may be doubled up for rejection. VR1-TX lights, VR2-RX lights, VR3-Sq Rng.
TX: T7, T8, T9, L10, L3, and L1. R58 may be changed to a lower value for increased RF output. Modulation disable is D10.

Pyramid 1300, (LC7131-PLL). Just another 'Ancient Mary' mobile unit. C22 (1Mf/25VDC) may be increased for improved ANL. RV1-RX lamp adjust; VR2-Sq Range; RV3(2K)-AMC, defeat is C94 1Mf/16VDC; RV3(20K) is TX lamp adjust. RX alignment: T1, T2, T3, T4, and T5. TX alignment: T9 and T10.

'BLACK CAT' JB-12/RB - R. F. AMPLIFIER

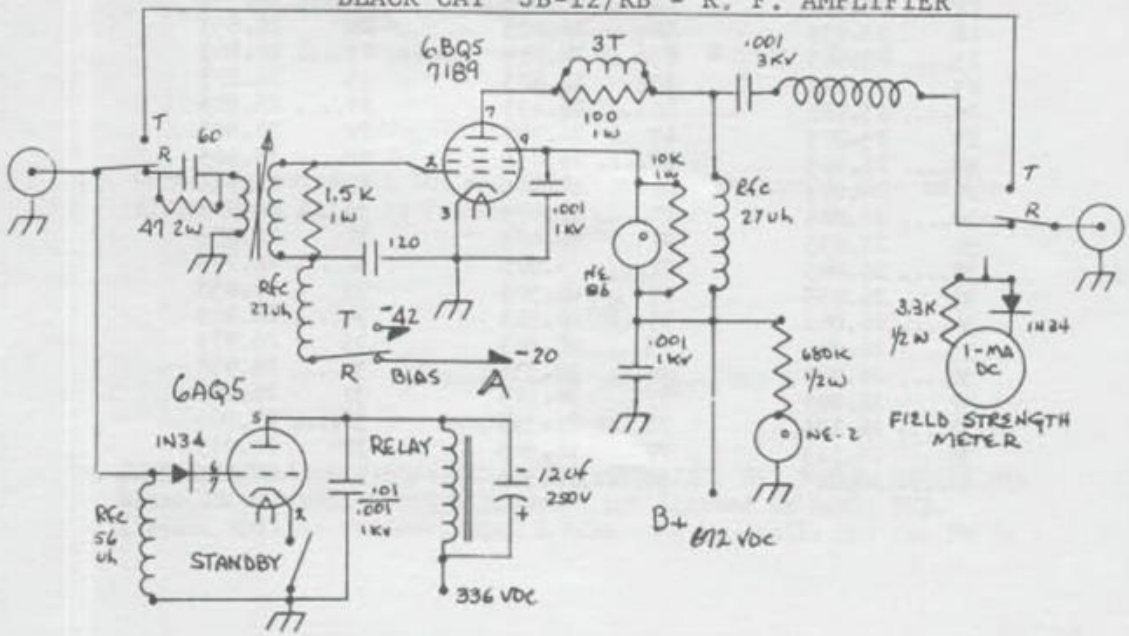

REALISTIC TRC-216 - 40 CH WALKIE-TALKIE

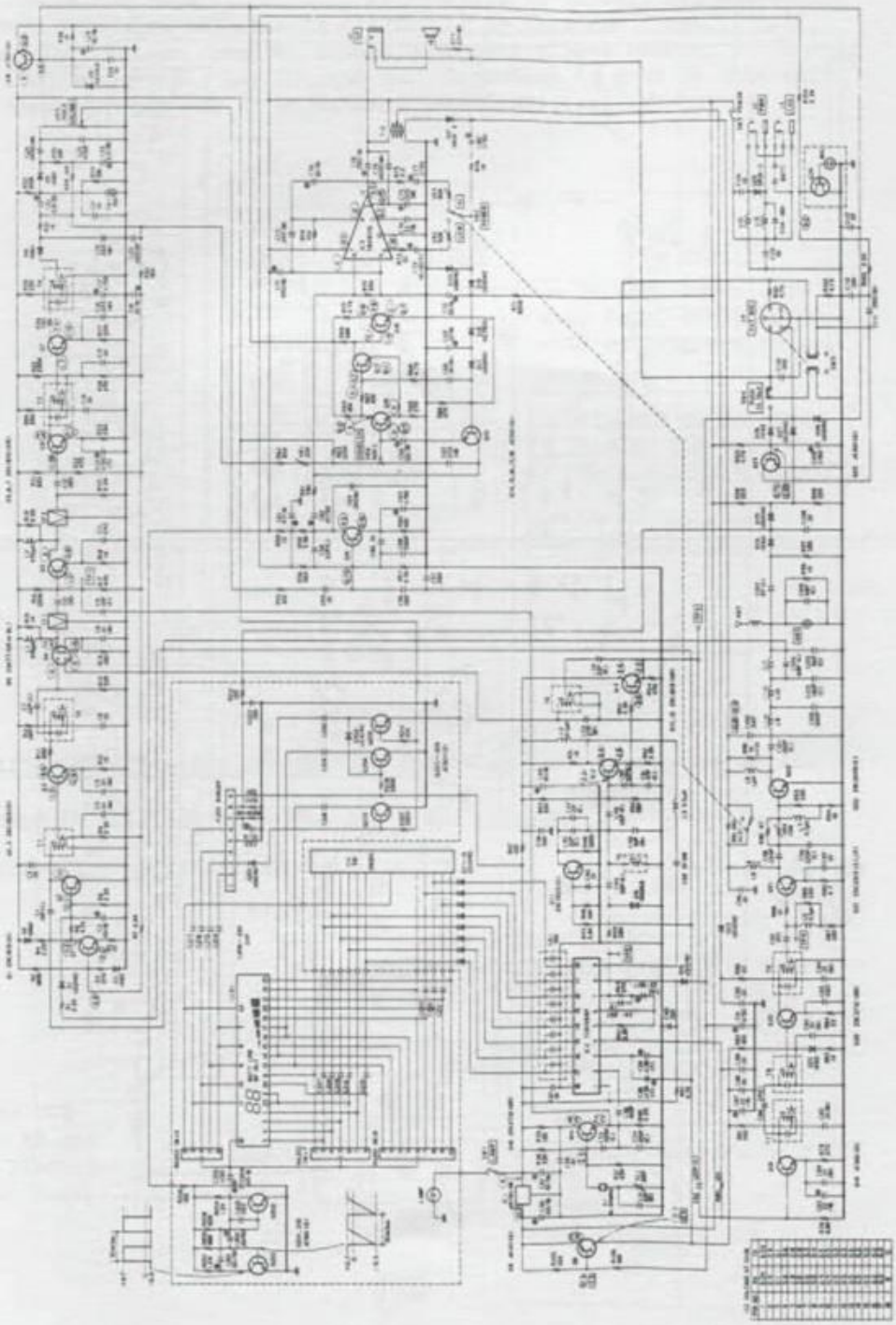

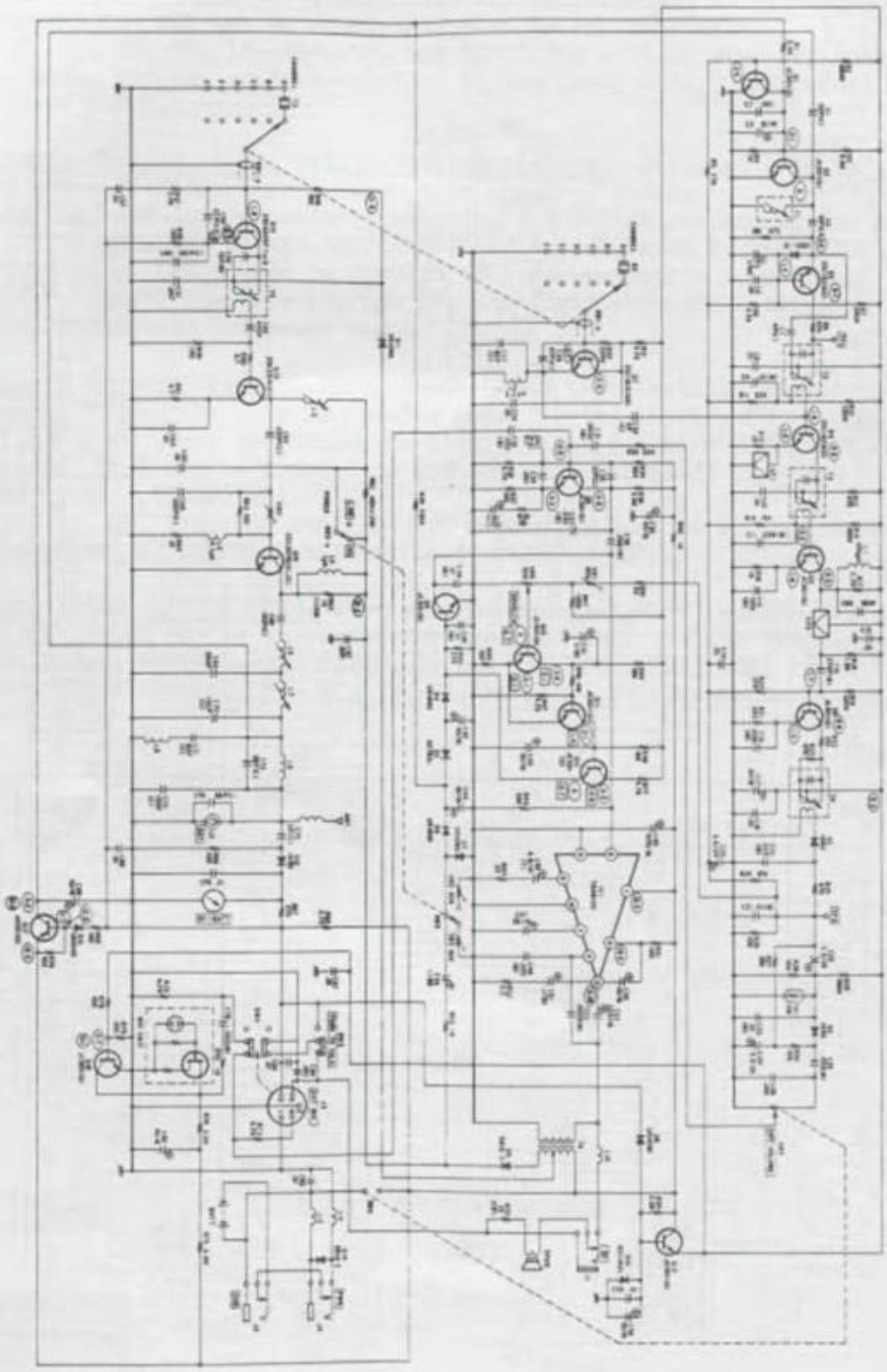

REALISTIC TRC-215 - 6 CH WALKIE-TALKIE

COBRA 20LTD (TC9106-PLL)

Out-of-the-box; S/N: 27006870. Ch.1 - 3.8W, Ch.40 - 4.0W; modulation was 50% maximum? VR1-RX Mtr, VR2-Sq Rng, VR3-TX Mtr. There is no adjustment for modulation, only alternative is to pull D13 out of the circuit. Receive adjustments (CAREFULLY do this one first... L-16, adjust for maximum receive, should be a very slight peaking.) Then go ahead and adjust L1, L2, L3, and L4. Rejection is good in this unit. See drawing below for TX adjustment locations.....

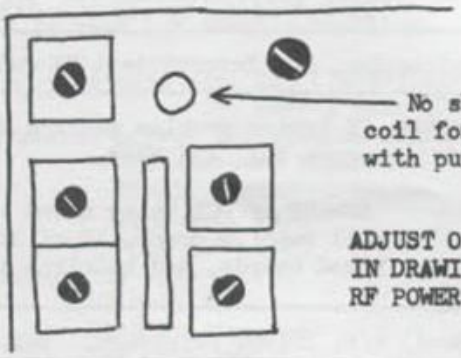

Excalibur SSB

Clarifier Modification Update; The following information was not inserted in Vol. 22, page 38. Below are original locations of the Clarifier pot/switch wires.

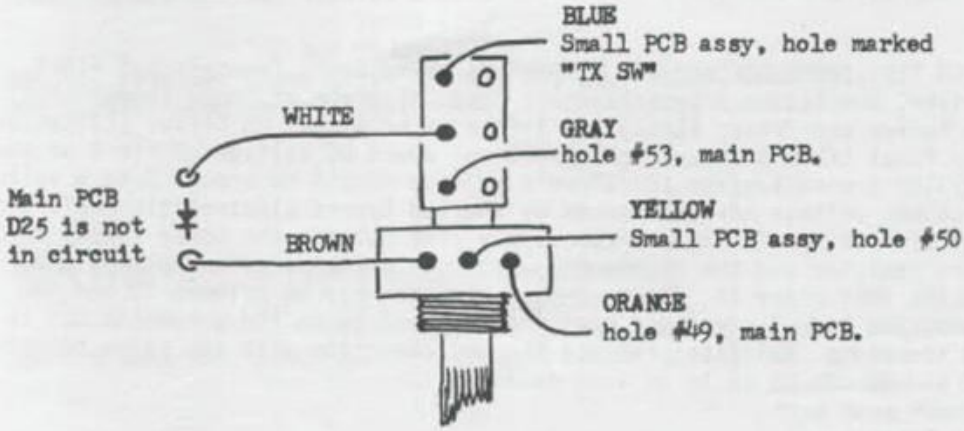

HINTS/KINKS/GOOFS

EXCALIBUR SSB (MC145106PLL): AM TX; no adjustment on RF power as was going full blast. Found TR51 Shorted E-B. Replaced 2SA1012 with 2N6124. (Special Note: Replaced with this as was only type I had on hand, Cross-Reference called out ECG-153, 7A/50W.) The 2N6124 is 10A/50W cross-referenced to ECG-378.

L33; busted slug? NOTE... There is no hole in bottom of coil form to get at from the other end if you remove. Will have to pick it out piece by piece - CAREFULLY..

Hygain 671B: Low TX modulation, Low/Intermittent RX audio... Found C81 bad.

Ham International UK 120FM: If having problem getting enough drive in AM; remove VR12 and VR13.

BEWARE of PCB being bowed across back of chassis! Will readily crack, 10 of 12 units checked had a bowed boards, and hairline cracks.

Superstar 3900 (High Band) S/N: 201909 reference. Vol. 22, pg 40 ANL/NB conversion. Have found some units that are being built with Green wire instead of Red.

---

858 SSB chassis: Problem - squeal for about 1/2 sec when keying up, then would disappear? Turned out to be L37 - ? It went away with a slight adjustment - RCH.

RCA 14T305..02A-PLL: Be careful when modifying, mod is the same - but traces on the PCB are different...

TECH TIP: COBRA GTL and LTD AM Mobiles. Symptom-No Transmit but Final, Driver, and Buffer transistors are good. RF probe or Scope shows signal on Buffer and Driver (Base) but little or no signal on Driver (Collector) and Final transistors. Troubleshooting: check DC voltage on pin 9 of the TA7310P transmit mixer IC. DC xmit voltage should be around 8 to 9 volts. Problem: voltage of zero caused by shorted bypass electrolytic capicitor (33 ufd 10V or similar) on the supply line between the power supply feed thru resistor and the 27 Mhz RF output can primary coil supplying power to the Xmit mixer IC. The feed-thru resistor may be between 33 and 560 ohms. The bad electrolytic capicitor may not be on the schematic but is in the radio. Solution: replace the bad capicitor with any value between 10 and 50 ufd at 15 to 50 volt rating.

Micronta Frequency Counter (Radio Shack Cat. No. 22-351)

by R.M.

Discontinued a 'bunch' of years back..... very good portable counter. The only misgiving is it's affinity for 9V batteries, will gobble them up.

I use these units all the time, even on the test bench. Bought 3 of them when closed out at $25 apiece. Since then have repaired about a dozen additional units at a good profit.

Originally built by Continental Specialties Corporation for 'Radio Shack'...(address was/is: POB 1942; New Haven, CT 06509). Their part number for the Micronta Freq. Counter is: 15-0001.

Following guide may be used for trouble-shooting..

Display Problems.....

One digit 'on' only, or others dim: C13 (.0047) open
Shorts near Q7-Q12

Missing digit or segment: Driver transistors shorted Q4-Q12
330 ohm open (R1-R7)
Display bad
7031 I.C. (A1)
4511 I.C. (A2)

Decimal points missing: R19 open (8.2K)
Q4 open
Display pins open
Bad Display
Q4-Q12 shorted

No display or display dims after warm up: C14, C17, C18 shorted or reversed
7805 bad (A10)

Completely dead: Jack or jack wires open
C14, C17, C18 shorted
Switch Open
78L05 bad
Battery snap shorted
7031 bad (A1)
I.C. shorted internally
Bad display

Counting Problems.....

Freq. double what it should be: Time base not adjusted
Bad 7031 (A-1)

Displays all zeroes: Time base dead-check 5369 (A4), and 4017 (A5).
Bad 74C02 (A7)
Bad 7031 (A1)

Erratic reading: Check CR1, CR2, Q1, Q2, Q3, 74LS90, and 7031.

Won't read 500Hz or low freq. unstable: Check CR1, and CR2.
Q2, Q3 bad
C3, C5 open
R9 (2M ohm, open)
C1, C2 shorted
74LS90 bad

Won't read 45MHz or high frequencies: 74LS90 bad
7031 bad
1K ohm pull up on pin 1 74LS90 open.

Reading does not update or just decimal points appear: Q2, Q3 bad
C3-C6 open
Time base dead
(see, displays all 0's)

Can't adjust 10MHz, time base erratic: trimmer cap open
78L05 defective

"Beef The Tube"
by W.H.

Most tube type units just don't have it in the audio department when it comes to output modulation swing in transmit.

By adding a few parts a vast improvement will be immediately noticed! DO NOT REMOVE ANY ORIGINAL PARTS OR WIRING!

Original schematic "cut-out" below is of the Gemtronics GTX-5000. Other similar type may be "modified" the same way.

ORIGINAL - UNMODIFIED, LAYOUT:

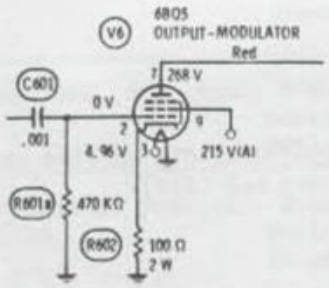

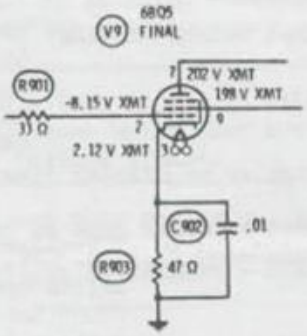

"MODIFICATION" - Added Parts are shown only with the tube pin #'s....

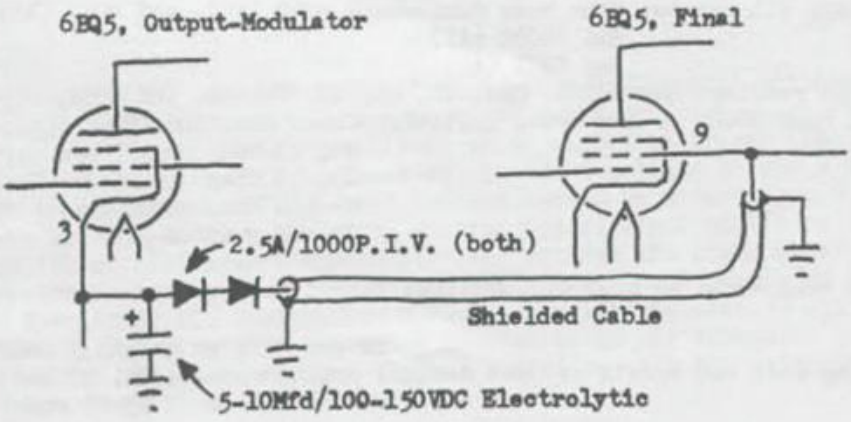

TRC-500 SCHEMATIC

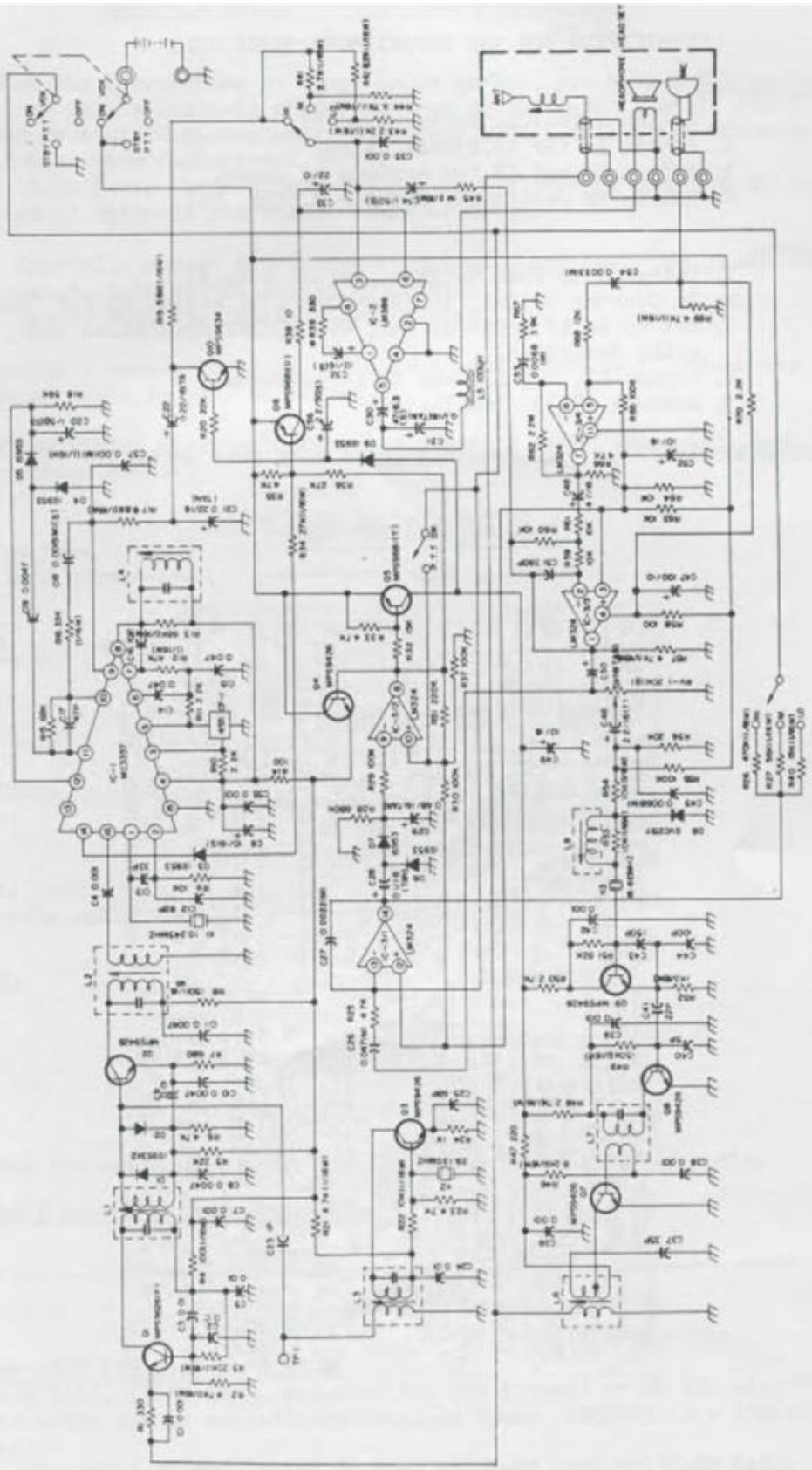

TRC-500, Alignment Procedure

"SIMPLIFIED FOR THE EXPERIENCED TECHNICIAN"

Transmit:

1. Switch 1 to VOX, Switch 3 to HI
2. Adjust L8 for 49.830MHz TX Fo.
3. Adjust L6 and L7 for maximum RF power.
4. RV1 is FM deviation, set for 4.5KHz, MAX.

Receive:

1. Switch 1 to Push to Talk, Switch 2 to HI
2. Fo Counter to TP1 (junction C23/L3); adjust L3 for 39.130MHz.
3. Set up an RF input of 1mV, 49.830MHz; modulation 1KHz, ±2KHz deviation.
4. Adjust L1, L2, L3, and L4 for maximum.
5. Recheck 39.130 Oscillator.

TROUBLESHOOTING..... Mostly busted wires with this unit!

TRC-500, PCB TOP VIEW

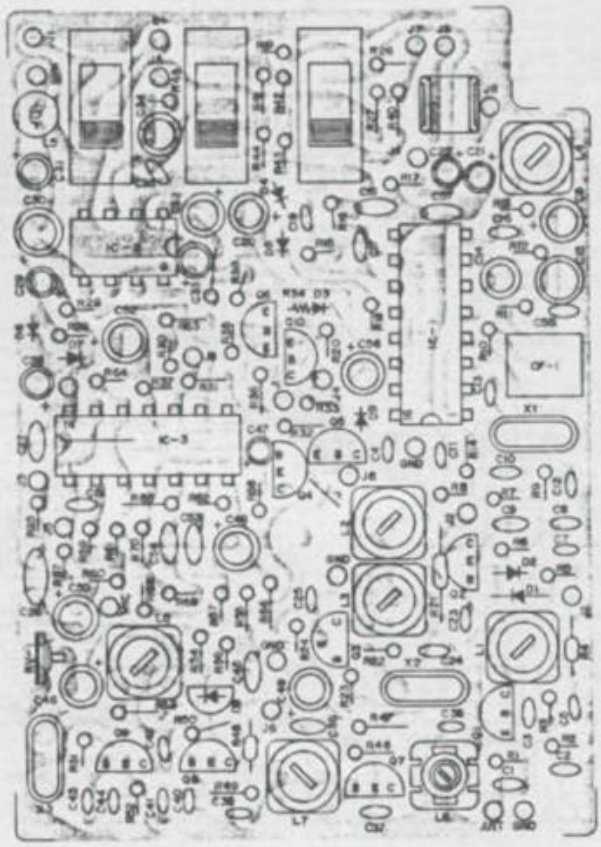

Motorola MOCAT 40 - Microphone Replacement

by G.B.

When the microphones on these units go bad, you have a BIG problem! Since they have a built-in preamp powered by the radio itself, can't be replaced by a stock microphone. Also from what I understand Motorola doesn't make/have replacement parts!

A CA-50 Cobra Power Microphone can be utilized by rewiring it to the original Motorola microphone cable as below:

1. A. Carefully remove microphone cord from CA-50 head, clean off the push-to-talk switch soldering points.
   B. Remove Blue and Yellow wires (discard).

2. Carefully remove Motorola cable from microphone head - clean the ends of cable as will be reused.

3. Follow wiring diagram below using Motorola cable/plug, and CA-50 microphone head.

CA-50 Push-To-Talk Switch

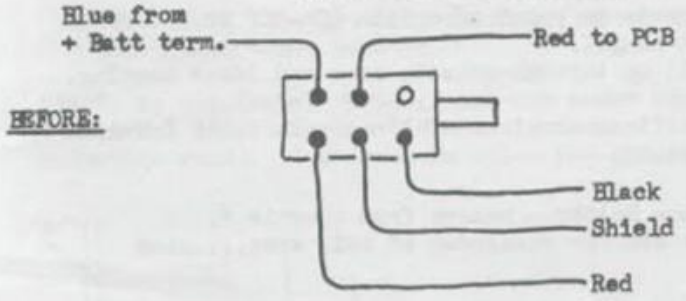

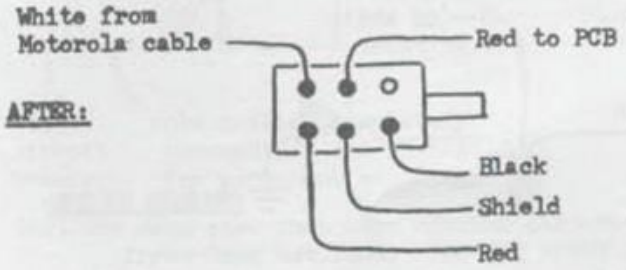

Now the radio will power the CA-50 and have plenty of audio.

THIS IS A PROVEN MODIFICATION.....

SPECIFIC TUNEUP

Fulcomm 2330 (23 Ch.) No SAMS #:
TX: Peak L463, L465, L451, and L441 for max forward on Ch 12; also L464 coils may be spread/compressed to tune. 2SC1975 is a 15W/2A Final.
VR481-AMC, VR491-TX Mtr, VR181-Sq Rng, VR151-RX Mtr, VR152-RF Gain.

Power Supply Replacement in Excalibur SSB: MC145106-PLL Version
by B.W.

I have been replacing power supplies in these units for some time, but haven't gotten around to writing it up.... Following was performed in S/N: 300011, one of the very first units.

This particular unit had a very CHEAP main PCB chassis decking, it had flexed and broken the board. Angle bracing was installed before installing the new power supply. CHECK first to make sure that frame is strong enough to support the new P/S.... *will mean put in 'goodie-box'.

1. Use drawing below and follow directions:

Bottom View P/S Reg. PCB

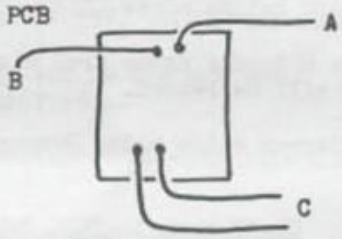

A. Unsolder, reroute to point of origin (On-Off Sw.)
B. Unsolder, let hang...
C. Unsolder, pull up through chassis deck and leave hanging.

2. Carefully compress plastic grommet on AC line, pull cable forward. Save grommet for re-use.

3. "Cut" wires off the fuse holder - remove from chassis *, use diagram below as a aid for remainder of this step.....

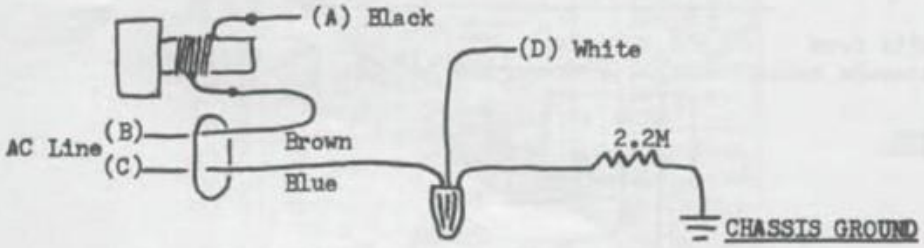

A. Remove wire nut, *
B. Reroute White wire (D) to point of origin (On-Off sw.)
C. Reroute Black wire (A) to point of origin (Xfmr Pri.)
D. Remove power cable, *
E. Remove 2.2M resistor, *

4. Remove 110V/220V switch from chassis, put screws back into switch hardware. Cut all wires off switch, and re-route all to point of origin. Switch to *

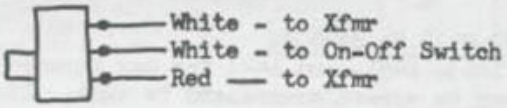

P/S replacement in Exc. SSB, (Cont.)

5. Remove Power Xfmr *; put a label on the xfmr:

Primarys.....Black and White wires; 110VAC
Black and Red wires; 220VAC
Secondary.....Yellow wires, fuse 4A fast blow.

6. Unsolder TR603 on the regulator PCB, then remove entire unit. *

7. Obtain a Radio Shack 22-124A Regulated Power Supply - (NOTE: Any unit that fits may be used as long as it fits and has adequate voltage/current regulation.)

A. Use a 9/64 drill bit and carefully drill out the pop rivets, then remove cover.*
B. Remove screws on the rear terminals; bend flat the small tabs; cover the terminal board with 3 strips of electrical tape.

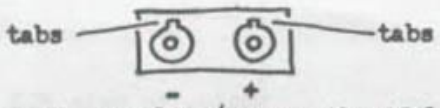

C. Remove AC line grommet, unsolder/remove the AC line (clean off all places where removed.)

8. "FIT", do not install yet.... the new power supply, case and all! It will not fit flat onto the chassis frame (It might in later production runs). Use drawings below for mounting and drilling holes:

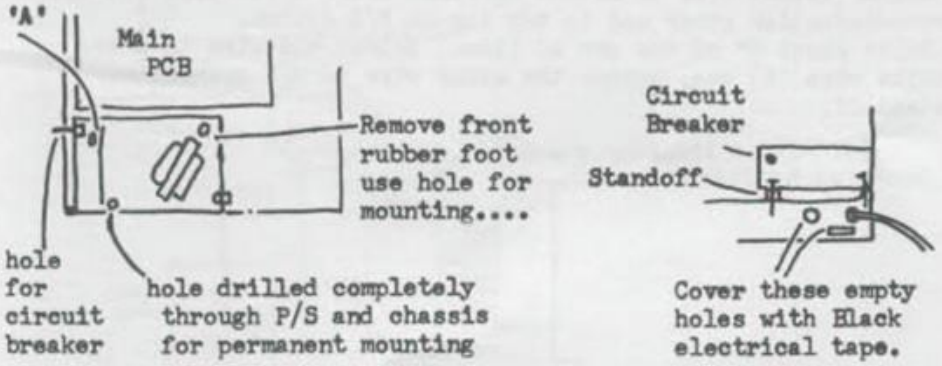

CAUTION: Make sure that when mounted permanently the main chassis frame does not flex. DO NOT MOUNT PERMANENTLY YET...

9. Route the AC line removed from the power supply through the rear chassis AC hole up to the On-Off Sw. Use original grommet and install permanently, after making sure of 6" to 'play' with. slack are present at switch end.

10. Now you can permanently install the power supply. USE EXTREME CAUTION WHEN TIGHTENING DOWN HARDWARE. CHECK COMPONENTS IN POWER SUPPLY TO MAKE SURE THAT YOU HAVEN'T SHORTED SOMETHING. (Bridge Rectifier.....leads touching each other..)

P/S replacement in Exc. SSB, (Cont.)

11. Route Yellow wire hanging from main PCB up through chassis bottom and ('A') hole. ...See Step 8 for 'A'... Solder Yellow wire to - standoff on P/S's rear terminal standoff, a Black wire is already soldered to this position.

12. Use drawing below for steps 13 and 14.....

....REAR OF ON-OFF Switch....

Original wiring

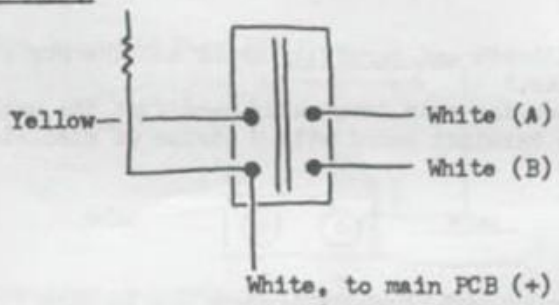

13. A. Remove the Yellow and both White wires (A and B), SAVE - clean of switch locations.
B. Resolder a White wire to where the Yellow was removed - reroute other end to + terminal of power supply and carefully solder. (A Red wire is at this location.)
C. Solder Yellow wire to bottom terminal where White wire (B) was, reroute/solder other end to top lug on P/S switch.
D. Split about 6" of the new AC line. Solder one wire to where White wire (A) was, solder the other wire to P/S transformer standoff.

....Xfmr standoffs....

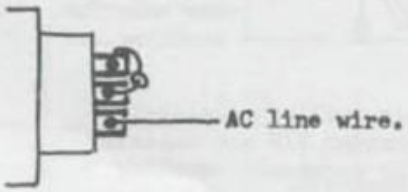

14. Double-check wiring - rough skematic below - also make sure that nothing is shorted.....

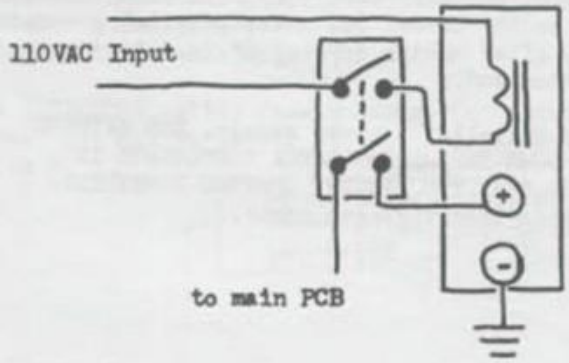

P/S replacement in Exc. SSB (Cont.)

15. Turn switch on the P/S to ON position. Plug in AC line, turn on the main chassis switch and check out.

16. Remember to keep schematic that came with power supply. If it goes bad all you have to do is unsolder 4 wires, unbolt/screw to remove for service.... no problem!

SONAR FS-2340, UPDATE

by W.H.

Check for missing part in R.F. Output Circuit (V-11, 6BQ5):

Screen Grid Circuit, Pin 9 should have a .01Mfd/250V in parallel with R54 (22K, 1W, 10%).

See partial schematic blow-up with update, as to how it should be modified.

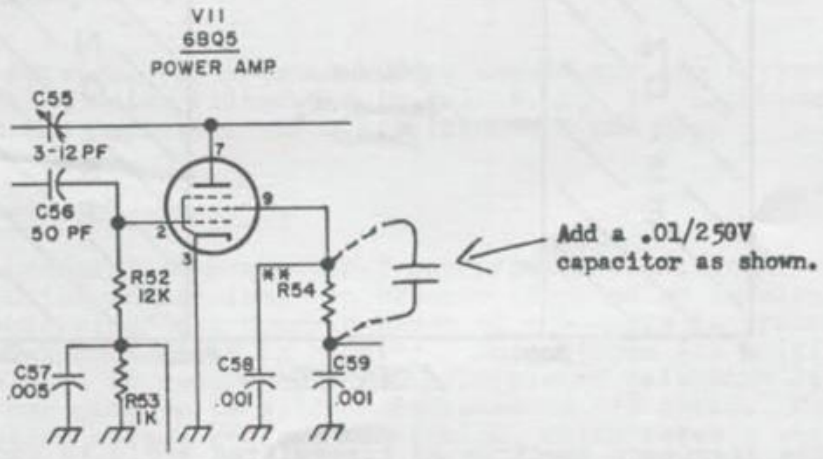

(Ed. Note) R54 controls screen voltage so that the FCC limit on RF is maintained.

SONAR PARTS

Sonar Radio Corporation
3000 Sterling Road
Hollywood, Florida 33021
Phone: 305-981-8800

IMPROVING YOUR "EARS"

by JS

How many times have you had your receiver cranked up all the way trying to pull in that weak station, only to have it covered up by hash, hiss, and other atmospheric noise? Using a receive booster or increasing receiver sensitivity gets you more signal, but it pulls up the noise too. Very limited improvement.

The automatic noise limiters and noise blankers available as original equipment are generally good for nothing except that their panel switches can be used for something else.

In my mind, the best way to improve your "ears" is to boost the audio signal and reduce the noise (i.e. improve the SIGNAL-TO-NOISE RATIO).

How do we do this? EASY! Let's start by looking at the diagram below:

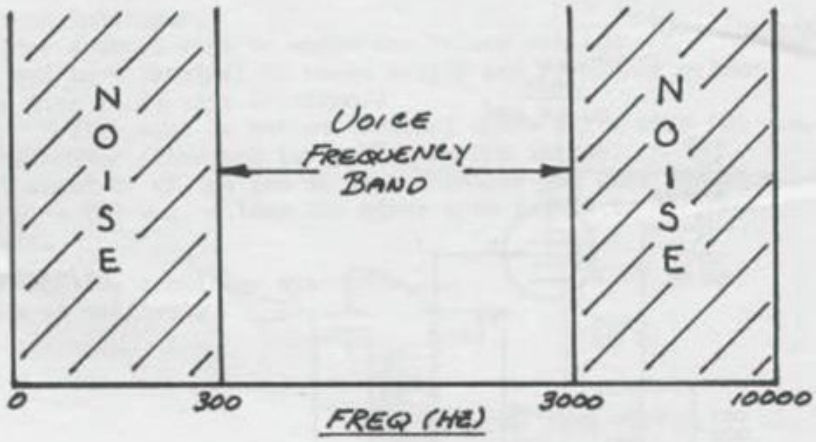

The frequency spectrum of transmitted audio is shown above, and can contain all frequencies from about 50 Hz to 10 KHz. Voice frequencies fall between 300 Hz and 3 KHz. Anything outside this "band" is unwanted noise. A simple way to filter out this noise is to hook a graphic equalizer into your rig's receive section. (Vol. 23, Pgs. 12 and 60). By using the equalizer as a "band-pass" filter to "boost" voice and "cut" noise, the signal-to-noise (S/N) ratio can be improved by almost 20 dB! AND...when you consider that a 3dB increase in S/N ratio reduces the noise by half (voice seems twice as loud), you begin to understand what a 20 dB improvement can mean.

"Ears"...(Cont.).....

For those people who don't have or don't want to buy an equalizer, construct the circuit below to obtain about the same result:

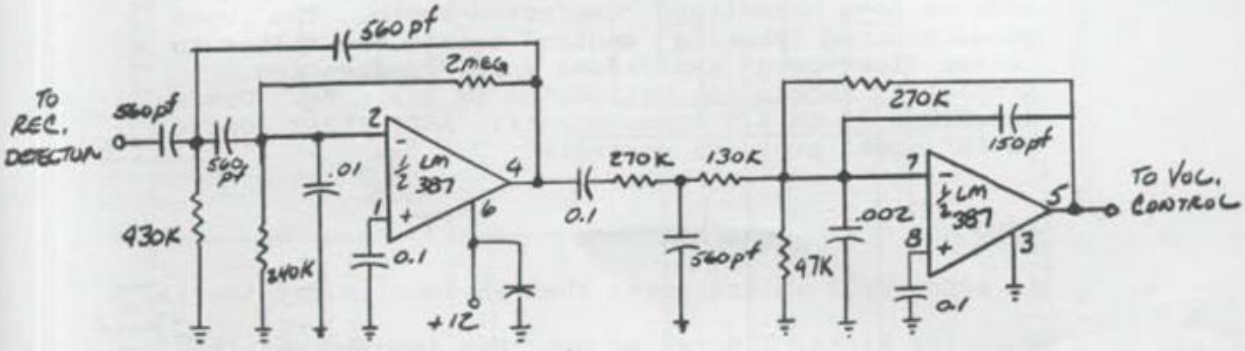

RECEIVE SPEECH FILTER (300HZ - 3KHZ BANDPASS)

In addition, 02A chassis owners should try the Active-tracking Noise Filter Mod in Vol. 9, Pg 27 Experiment with the capacitor value. I liked 0.1 mfd best.

COMPRESSION/EXPANSION

"Companders" like the VSB-I can provide significant noise reduction in receive. In essence, companding involves "compressing" the dynamic range of the audio in transmit, and "expanding" it in receive. This system was originally developed to reduce noise on multiplexed telephone lines, and can give up to a 30 dB increase in S/N ratio. Compression raises average modulation, which makes a station sound louder (especially on AM). Commercial broadcasters have been using this technique for years. VSB-I compresses 2:1 and expands 1:2. DX Products 321A compresses 3:1, which seems to be the practical limit as 4:1 is definitely too much.

Unfortunately expanding an uncompressed signal actually increases the noise.

DOLBY™ NOISE REDUCTION

Won't work - forget it!

"Ears"...(Cont.).....

"PHASE-COHERENT" FILTERS

A phase-coherent filter like the DX PROUDCTS 2112A/B (available from SELMAN ENTERPRISES) effectively noise-reduces both normal and compressed audio. The front panel mounted "Peaking" control swings the filter to better "lock-onto" individual voice frequencies. Completely knocks out hetrodynes in SSB mode. Gives excellent 45 dB S/N improvement!! ANTI-BLAST control on "B" model protects speakers.

ECHO

If echo works in transmit, then why not in receive????

Just for kicks, I wired an echo box into my receiver at the volume control as below:

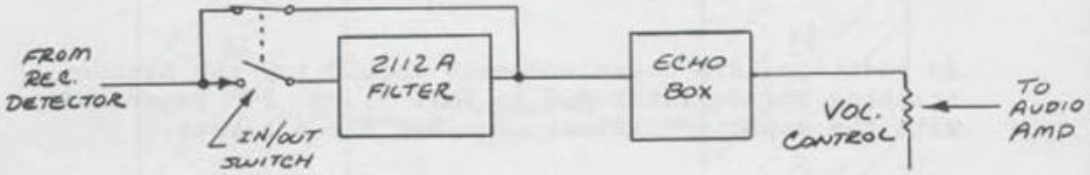

An improvement in voice recovery was especially noticeable on weak stations (less than 3 S-units). Short delay times worked best. Using 2112A and ECHO together produced the best overall results as 2112A's 45 dB noise reduction was effectively DOUBLED by the echo. This is because the listener is hearing everything TWICE. Adding ECHO to a signal that already had it produced some pretty weird sounds, especially when delay times were out of sync.

In conclusion, it's possible to achieve tremendous improvement in receiver performance by using the above techniques. Hearing is believing.

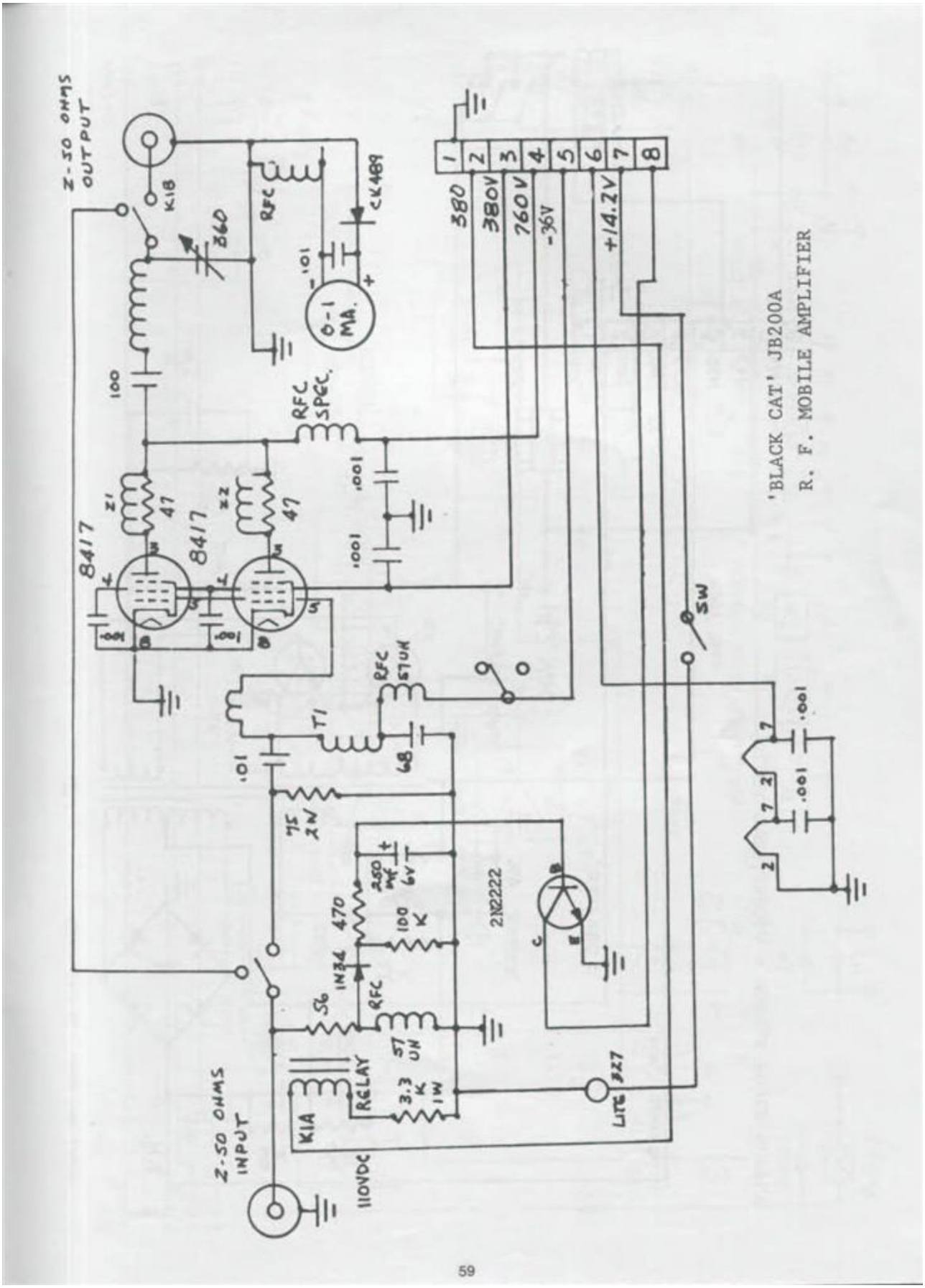
'BLACK CAT' JB200A
R. F. MOBILE AMPLIFIER
Z-50 OHMS OUTPUT
Z-50 OHMS INPUT
K1B
K1A
RELAY
110VDC
8417
8417
Z1
Z2
47
47
100
RFC SPEC.
RFC
CK489
0-1 MA.
.101
.001
.001
.001
.001
.001
T1
RFC 57UH
.101
68
75 2W
250 MF 6V
470
100 K
1N34
RFC
56
57 UH
3.3 K 1W
2N2222
LITE
#27
SW
380
380V
760V
-36V
+14.2V
1
2
3
4
5
6
7
8

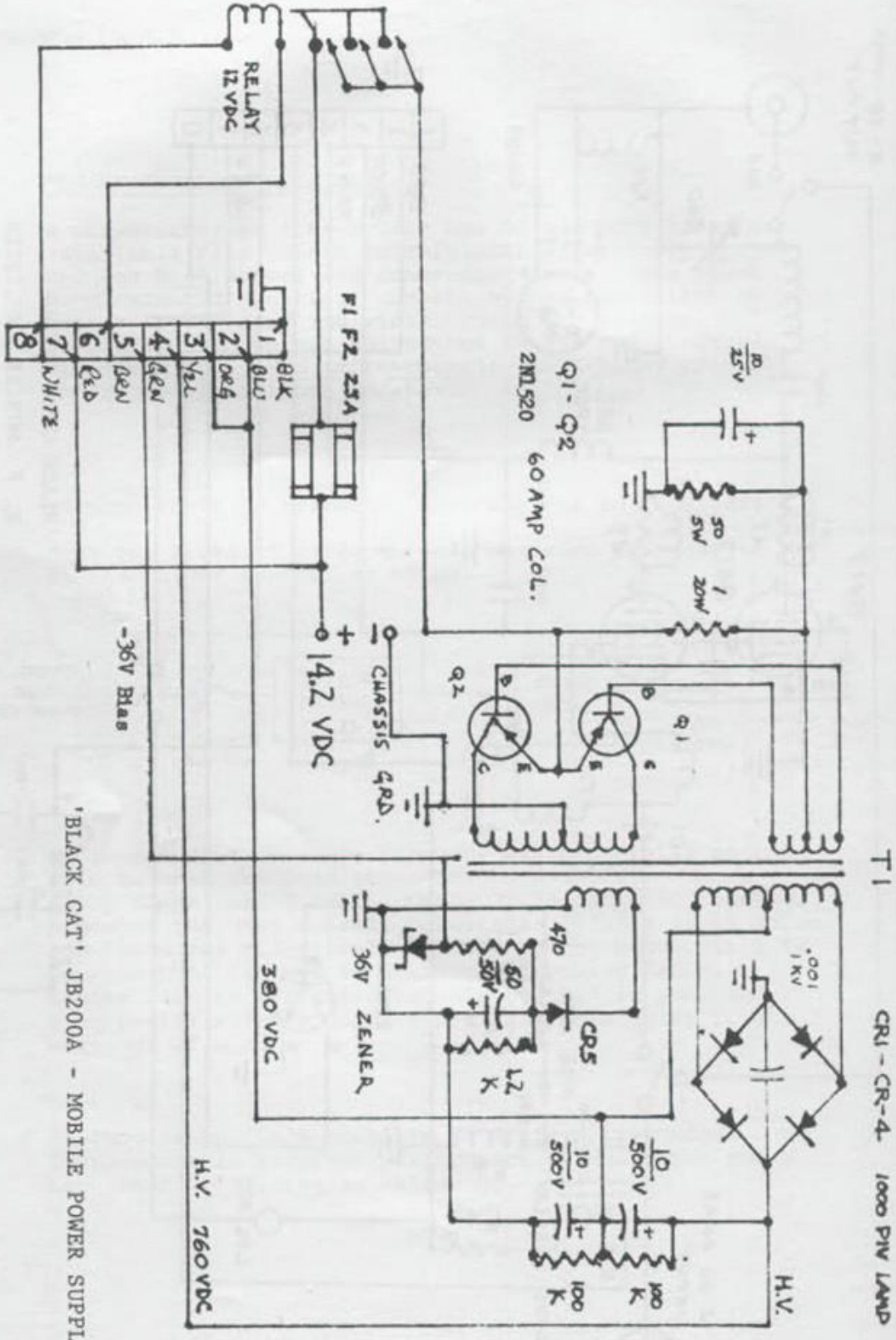

'BLACK CAT' JB200A - MOBILE POWER SUPPLY

SUPER STAR VOICE SCRAMBLER I

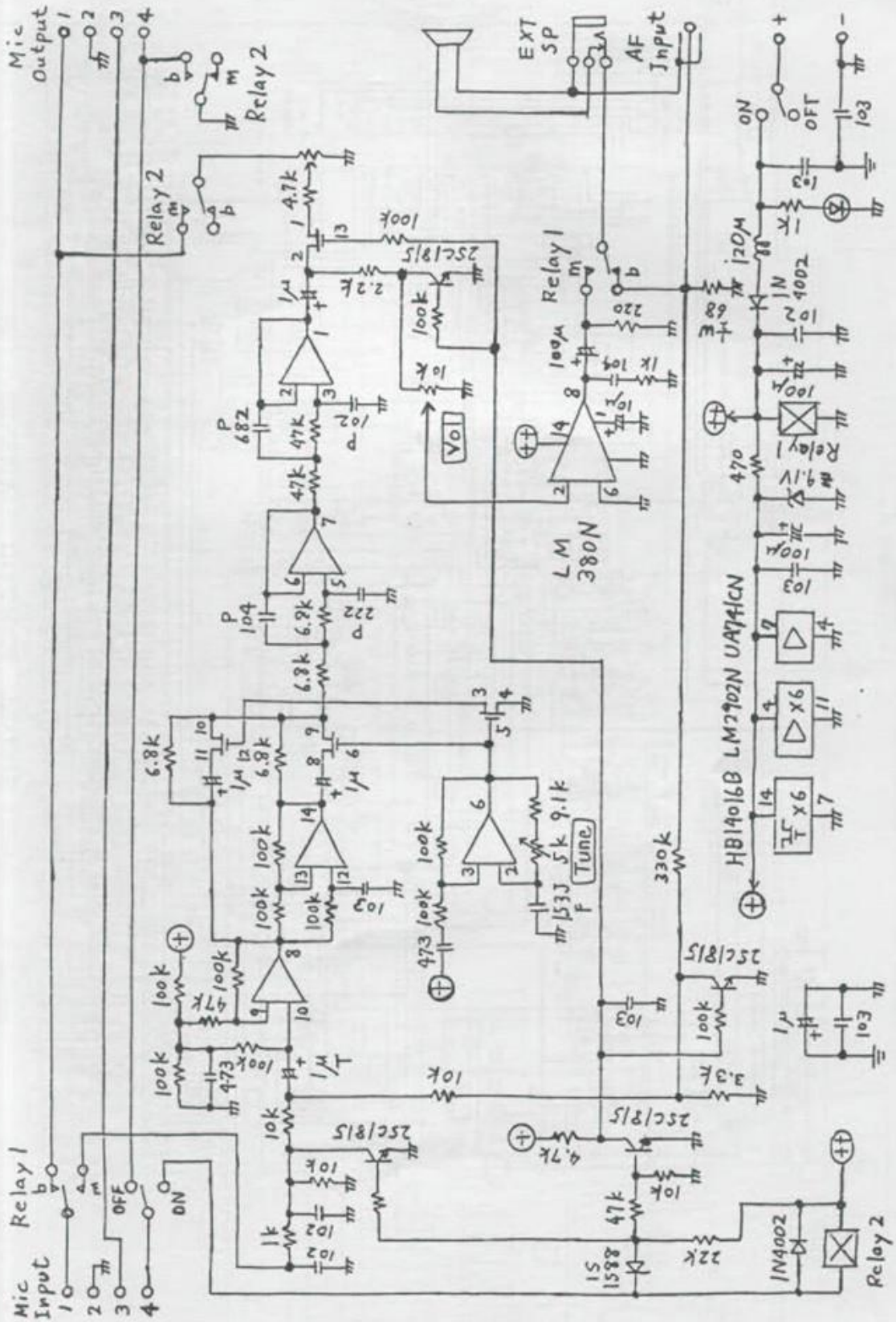

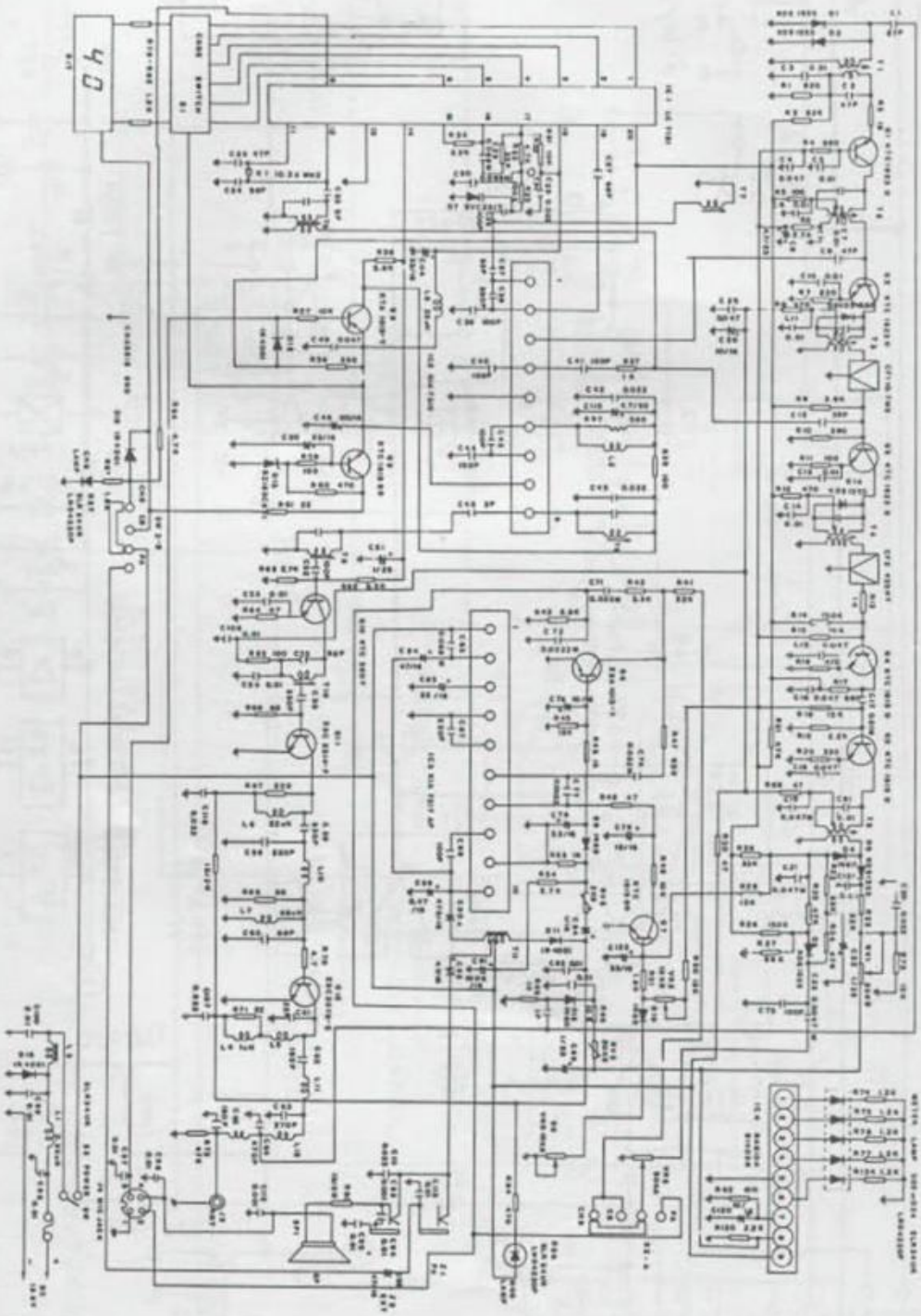

SCHEMATIC DIAGRAM PRYAMID 1300

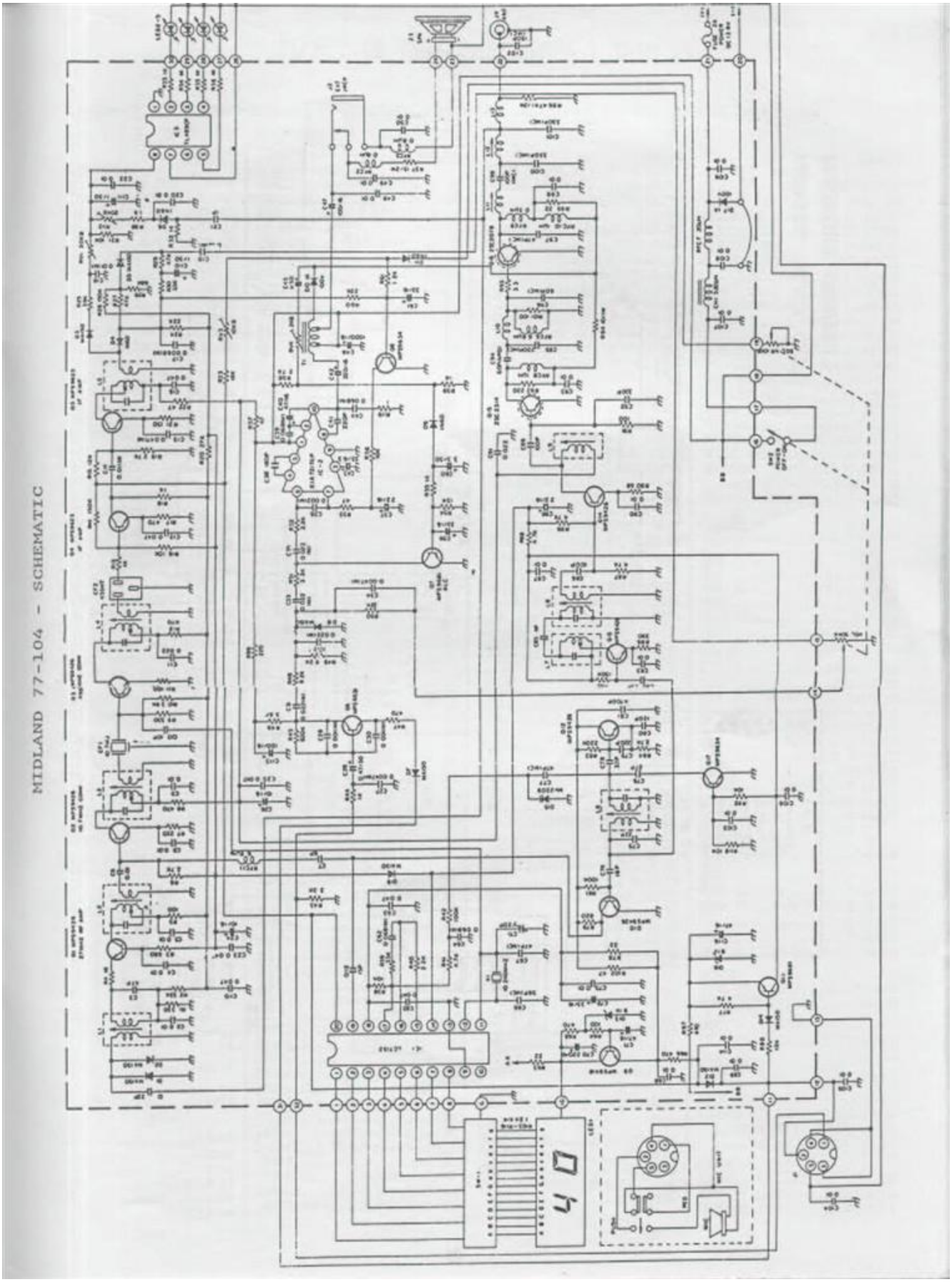
MIDLAND 77-104 - SCHEMATIC

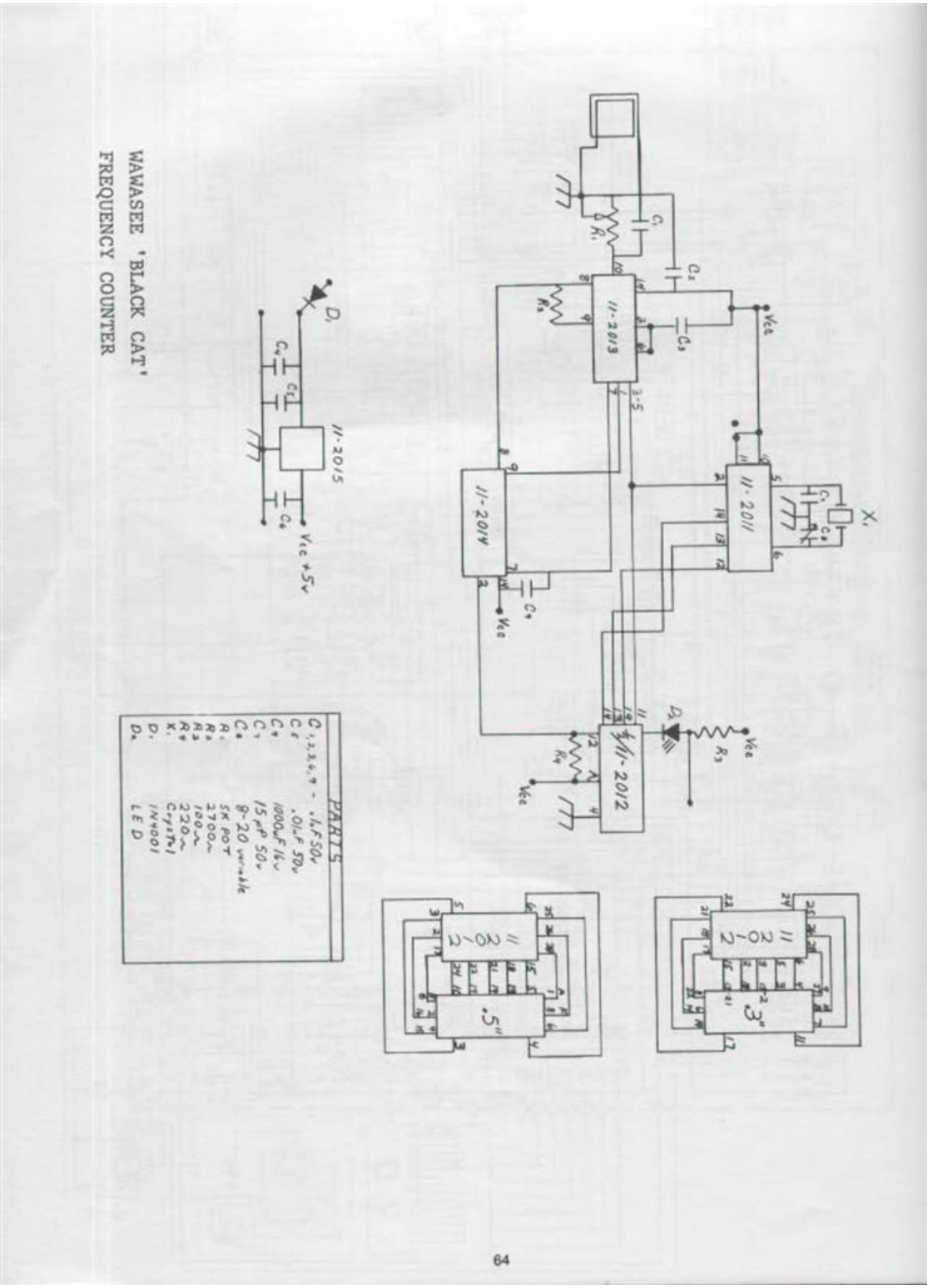
WAWASEE 'BLACK CAT'
FREQUENCY COUNTER
PARTS
C1,2,3,6,9 - .1µF 50v
C5 .01µF 50v
C7 1000µF 16v
C8 15 µF 50v
C4 8-20 variable
R1 5K POT
R2 2700Ω
R3 100Ω
R4 220Ω
X1 Crystal
D1 1N4001
D2 LED
11-2011
11-2012
11-2013
11-2014
11-2015
Vcc
Vcc +5v
3-5
.3"
.5"

SECRET CB INDEX - VOLUMES 1 THRU 23

CODES: A - ALIGNMENT PROCEDURE; C - CONVERSION; FC - FREQUENCY CHART; M - MISCELLANEOUS INFORMATION; S - SLIDE; SC - SCHEMATIC; T - TUNE UP.

VOL/PG

MISCELLANEOUS:
CONVERSION TIPS FOR ALL SSB RADIOS.....9/7
"A" CH MOD FOR "RC" CHANNEL ON PLL RADIOS.....9/16-17
MB8719 MOD....8/15;10/25-26
MB8719 w/11.1125 MOD..11/15
UPDATE.....14/11-12
MB8719 5KC DROP.....18/68
PLL 01A MOD.....9/15-17
PLL 02A MOD...3/13-15;18/56
BROADBANDING 02A units.4/55
23 CH 02A AM CONV.....12/32
TECH TIPS on the 858 Chassis.10/55;19/59,60,67
UNIDEN 858 UPDATE....9/8-11
How to get on 28 & 29 MHz w/UPD858 PLL.....11/4-7
UPD858 AM CONV.....11/35
Reveiver WIDEBANDING for 858 CHASSIS.....13/34
THUMBWHEEL CONV. FOR 858 CHASSIS.....13/35-37
How to increase ANL efficiency 70%.....11/8
HAM RADIO CRYSTAL SELECTOR: DRAKE TR4;HEATHKIT HW101 & SB104; KENWOOD TS-520 & 820S; TEMPO 1 & 2020; YAESU FT7B, FT101E, EE, EX & 901DM.....12/24
SM5104 AM CHASSIS..18/20-21
SM5104 SSB..6/26-27;9/20-22
For most 23 ch radios see CRYSTAL CROSS REF. GUIDE.....1/6-18;2/5-13
PHASE LOCK LOOP CRYSTAL CROSS REF. GUIDE....6/1-2

AIR COMMAND
CB-640.....T-5/38

ALARON
B-4075.....T-9/30
B-4900.....T-9/30
B-5050A.....T-9/30
B-5200.....T-3/41

AMERICAN MOTORS
32218A47/48/49/50....T-12/34

ARCO
300.A&SC&T-21/49-51;T-23/33
5000.....M-23/25

AUDIOVOX
MCB750.....C&T-3/41
MCB5000.....T-11/42
MCU6000.....T-6/18;15/60

AUTOMATIC
CBH2265.....C&T-3/41

AZDEN
PCS2000.....M-21/39

BETA
23 DELUXE.....T-16/32

BOWMAN
CB555.....T-3/44
CB750.....T-2/43
CB755.....T-14/44
CBH900.....C&T-3/44
CB910.....C-11/41;13/58
.....T-1/21;3/44

VOL/PG

BOWMAN (cont.)
CB920..C-14/43;T-1/21;14/43
CB930....C-3/21;T-1/21;3/44
CB950..C-5/39;S-4/49;T-3/43
CBH990.....T-5/43
CBR9600.....C&T-3/41;T-2/42
CBR9940.....T-3/44
CBR9950.....T-10/58

BRISTOL
BCB-2271.....T-16/41

BROWNING
BARON.....S-15/15-17
.....M-19/52;21/16
MARK III.....C-6/28
MARK IV....C-6/29-30;7/8-14
MARK IVA....C-7/8-14;14/5-6
SABRE.C-1/27;T-14/42;M19/52

CHANNEL MASTER
CB6830.....C-14/41;T-16/55
CB6834.....T-14/44
CB6835.....T-6/18

CLARICON
71200.....T-21/16

CLARION
DMA066.....T-3/45
JC202E.....T-3/45
RCJ003.....T-3/45
TC203E.....T-6/18

COBRA
CAM89....C-14/45-46;T-14/45
18LTD.....T-20/36
19.....T-7/51
19GTL.....T-12/34
19XS.....M-21/16;T-18/51
20LTD.....M-20/42
21 (23 ch).....T-20/36
21GTL.....T-3/41,58
21XLR.....C-10/58;21/25-26
.....T-1/20;10/58
25GTL.....T-3/41,58
25LTD.....T-17/35
29GTL.....S-13/57;19/40
.....T-3/45;14/42
29LTD.....T-13/59
29XLR.....T-1/20
32XLR.C-4/47;M-19/52;T-3/58
45XLR.....C-18/67;T-12/34
46XLR.....T-3/43
47XLR.....C&T-3/45
50XLR..C-16/53;18/22;T-3/43
55XLR..C-16/53,18/22;T-3/43
66GTL.....T-10/58
77X.....T-9/30
78X.....T-4/49;6/19;8/44
85.....T-15/61
86.....M-19/52
86XLR.....C&T-3/45
87GTL.....T-6/19
87XLR.....M-19/52
89GTL.....T-6/18
132-A.....S-1/28
132-B.....C-1/53
132XLR..C-4/47;T-3/45;16/39
C-19/52;S-10/45-46;15/15-17
135-A.....S-1/28
135-B.....C-1/53;S-1/29
135XLR....C&S-4/38;10/43-46
C-18/40-41;S-8/38;15/15-17

VOL/PG

COBRA (cont.)
135XLR (cont.).....M-19/52
.....T-3/45;4/38;16/39
138.....S-1/28
138XLR.....C&S&T-1/20-23
139.....S-1/30;T-1/20
139XLR.....C&S&T-1/20-23
140GTL....C&S&T-4/50;S-6/64
.....C&T-3/19-20;T-3/58
.....C&S-10/28-29
142GTL....C&S&T-4/50;S-6/64
...C&S-10/28-29;S-8/35-37
146GTL.C&S11/17-18;SC-21/64
.....C&S-23/45-47;M-23/59
.....C-15/18-19;S&T-10/41
148GTL.....C&S-8/16;C-18/29
.....T-6/19
148GTL-B...C-17/40-43,19/60
.....SC-17/43;T-16/55
148GTL-DX.....C-15/20-24
.....C-16/50-51;17/47,54
...C-18/13,17,23;19/37,46
.....C-21/18-19;S-21/36
...SC-19/27-28;T-16/43-49
.A-17/55-58;M-18/26;19/68
150GTL.....T-17/42;M-19/31
1000GTL.....T-6/18;14/42
2000 (C.A.P.).....C-6/23
2000GTL.....C-5/20;7/15-17
...C-18/29;C&S&T-15/25-28
.....S-13/40

COLONEL
FR360.....M-23/25

COLT
SX33.....C-3/4-7
1600X.....M-21/44
222.....T-6/20
290.....C-3/4-7;T-3/4
320FM.....A-19/48-51
350.....T-14/46
355.....T-18/19
390.....C-3/4-7;T-3/4
480.....C&S&T-3/8-15
.....C-5/39;8/18;T-3/58
485.....C&S&T-3/8-15
.....C-4/49;8/18;T-6/19
510.....A-18/44-45;SC-17/45
.....T-17/42,45
800.....C&T-3/4-7;10/58
870.....SC-21/53
1000....C&S&T-3/8-15;C-8/18
.....T-3/58
1200.C-8/18;T-9/30-31;16/55

COMMANDO
2340.....T-1/21

COMMTRON
XII.....A-18/44-45;SC-17/45

CONNEX
3300.....M-23/6

CONVOY
CON-400.....C&T-3/58

COURIER
BLAZER 40D.....T-3/58
CARAVELLE.....T-18/65
CENTURION.....S-1/61;5/55
CENTURION PLL..C-1/31,61-62
.....C-5/57

VOL/PG

COURIER (cont.)
CENTURION 40D...C&S&T-10/53
.....T-13/10
CHIEF 23.....T-18/65
CLASSIC II.....T-18/65
CLASSIC III.....T-18/65
CLASSIC PLL 40....C&T-10/59
.....T-3/43
COMET 23.....T-18/65
CONQUEROR.....T-18/65
GALAXY.....C&S&T-5/53-54
.....C&S-7/18-22
GLADIATOR PLL..C-1/31,61-62
.....S-1/61;5/55
NIGHTRIDER 40D.....C&T-3/46
RANGLER 40D.....T-3/58
REBEL 23+.....T-18/58
REDBALL.....T-1/21
RENEGADE 40.....C&T-3/46
ROGUE 40.....C&T-3/43
SPARTAN.....C-5/30,53,55,57
....C-1/61-62;S-1/61;5/55
TRAVELER II.....T-18/65

COYOTE
23.....T-16/32

CPI
300.....C-8/21
400.....C-8/21;T-10/59
2000.....C-3/25
2000 LOW.....C-9/23
2500.....C-5/37-38;S-5/37

CRAIG
L101.....T-6/20;11/42
L102.....T-6/20
L131....C&S-9/12-14;T=10/59
L132.....C-9/12;10/47;11/10
.....S&T-9/12;10/47
L231.....C-9/12-14;T-10/60
.....S-9/12-14;12/3
L232.....C&S-9/12
.....C&S&T-10/47;11/10
L321.....C&S-14/12
4102.....T-16/32

CRYSLER
4048076/8077.....T-6/18

DAK
MARK II.....T-10/60
MARK IV...C-5/21-23;9/18-19
.....C-21/25
MARK V.....T-12/34
MARK X...C-4/39-46;S&T-4/45

DEMCO
STAR II.....C-5/60
SUPER SATELLITE.....C-5/60

DNT
HF-12/3.....C&SC-21/46-47

EVERSONIC
DK-222.....T-19/42

EXCALIBUR
EXPORT SSB BASE-MC145106PLL
....C&S-22/36-38;SC-22/44
.....M-22/19,23,31

FANON
10-40.....T-6/20
FANFARE 125F.....C&T-3/43
FANFARE 182F.....C&T-3/41

CODES: A - ALIGNMENT PROCEDURE; C - CONVERSION; FC - FREQUENCY CHART; M - MISCELLANEOUS INFORMATION; S - SLIDE; SC - SCHEMATIC; T - TUNE UP.

VOL/PG

FANON (cont.)
FANFARE 184DF.....C&T-3/47
FANFARE 185PLL.....C&T-3/46
FANFARE 190DF...T-3/47;7/51
FANFARE 350F..C-5/57;S-5/55
.....C&T-3/47;13/12

GEMTRONICS
GTX-23.....T-15/61
GT44.....T-2/42
GT55.....C&T-3/48
GTX44.....C-21/25
GTX66.....T-6/21
GTX77..C-5/39;S-4/49;T-6/21
GTX2325.....C-15/29
GTX3323.....T-17/59
GTX4040.....C&T-3/48
GTX5000.....C&T-3/42;13/60

FIELDMASTER
MICRO MINI 40.....C-11/37
.....A-20/39;SC-20/58
TR-40.....C-15/63

FORMAC
240...C&M-22/19,21;SC-22/54
700.....C-23/36;T-22/32
.....M-22/20;23/35

FOX
240.....T-23/22;M-23/23
340.....T-23/23;M-23/23
444.....T-23/24;M-23/23

FUZZBUSTER
Z-40.....T-22/33

GENERAL ELECTRIC
3-5800A.....T-3/50
3-5801A.....C-16/33;17/39
3-5804B.....T-6/21
3/5804F.....M-21/16;T-10/61
3-5804G.....T-12/35
3-5805A.....T-9/31;10/61
3-5806.....T-18/65;19/64
.....SC-19/65
3-5811B.....T-9/31;10/61
3-5812A.....T-10/61
3-5813A.....C-14/41
3-5813B.....T-18/34
3-5814B.....T-6/21
3-5816A.....T-21/60
3-5817A.....T-7/51
3-5818A.....T-2/42
3-5819A.....T-11/42
3-5821A.....T-9/31
3-5821B.....C&T-3/54
3-5825A.....T-9/31-32
3-5825B.....C&S-20/55
3-5826A..C-22/50-51;S-20/54
3-5830.....T-3/42
3-5869A.....C-14/41;T-2/42
3-5871A.....T-13/60
3-5871B.....C&T-3/46
3-5875A..C&S&T-10/48;T-9/32
3-5900A.....T-12/35

GENERAL MOTORS
CBD-20U.....T-12/36
CBD-203.....T-3/48
DELCO AM/FM/CB...C-11/38-40
70BFMC3.....T-2/43
80BCB2.....T-6/20
90BCB1.....T-10/60
90BFMC1.....C&T-12/26
90BFPC1.....C&T-12/26
90BFTC1 AM/FM/CB....T-10/60
91YFMC1.....C&T-12/26

VOL/PG

GENERAL MOTORS (cont.)
4120.....C&T-3/46
4145.....T-9/32
4175.....C&T-3/46

GLOBEPHONE
GS-4800X.....C-20/36
.....A-20/39;SC-20/58

GREAT
K605.....T-16/32
GT818.....T-16/32
GT838.....T-18/65

HALLICRAFTER
HCM271.....C-5/50-51;6/39

HAM INTERNATIONAL
CONCORDE 2.....A-19/48-51
CONCORDE 3.....M-22/19
JUMBO 3.....M-22/19
MULTIMODE 3.....SC-20/52
M788.....SC-21/55
U.K. 120FM.....A&C-22/24
.....M-22/20;SC-22/56

HITACHI
CM-2425H.....T-22/18

HORIZON
29A.....M-21/45

HYGAIN
1-A.....C-1/22
PLL.....C-1/32
II.....C-8/20
IV 673.....T-18/34
HY-RANGE V.....T-18/51
V.....C-8/18;S-11/11
V-EXPORT.....A-19/48-51
VIII.....C-8/18;T-3/59
623.....S-1/33
674A.....S&T-4/60
V-674B.....T-1/21
2701.....T-2/42
2702.....T-3/48
2703.....T-3/48
2716.....T-12/36
2795 DX....M-23/25;SC-23/37

ICOM
720A.....C-21/39
745.....C-23/34
751.....C-23/34

ITT
CB-4000M.....C&T-13/61
CB-4400M.....C&T-4/17-18

JC PENNEY
PINTO SSB.....S-1/44
6241.....C-8/18;T-18/51
6246.....C&T-13/61
6247.....S-13/13
6248....C-8/24;S&T-13/14-15
981-6203.....T-15/30
981-6204.....T-9/32
981-6221.....T-21/35
981-6225.....T-14/47
981-6235.....T-19/42
981-6331.....T-20/41
981-7461.....T-9/32
981-8360.....T-10/61;18/51

JIL
615CB.....T-11/42
CITIZEN BPL524-77..SC-21/48

JOHNSON MESSENGER
40.....T-12/36

VOL/PG

JOHNSON MESSENGER (cont.)
50.....T-7/51
80.....T-7/51
123A.....T-1/21
132.....T-19/42
352-VIKING.....S-1/34
4120.....T-3/47
4125.....C&T-13/61
4135.....T-3/48
4140.....C-15/31;T-3/54
4145.....C&T-3/54
4170.....C&T-3/47;11/43
4174.....C&T-13/61
4175.....C&T-3/47;11/43
4250.....C&T-3/48
4730.....C&T-10/49-51
VIKING 200.....T-12/36
VIKING 260/270.....C&T-3/49
VIKING 4330/4360....T-11/43
VIKING 4740.....C&S&T-11/12

KENWOOD
TS-120.....C-22/12
TS-120S.....C-12/22
TS-130.....C-12/23;22/12
TS-430S.....C-18/24-25
TS-530S.....C-15/32;22/18
TS-820S...C-14/7-8;15/32-34
TS-830S.....C-22/18
TS-940S.....C-22/11

K-40
K-40 AM.....T-15/60
K-40 SSB.....S-20/61

KRACO
KCB1401.....T-18/57;19/42
KCB2320.....T-20/36
KCB2330A.....C-9/15
KCB2340.....T-2/42
KCB2345.....T-18/34
KCB4000.....T-11/43
KCB4003.....C&T-3/42
KCB4005.....T-9/38;11/43
KCB4006 "MAYDAY I"..T-22/33
.....SC-22/45
KCB4009 "MAYDAY II".T-22/33
.....SC-22/47
KCB4020.....T-3/49
KCB4030.....T-8/44
KCB4045.....T-14/47
KCB4080.....T-3/50
KCB4090.....C-19/52
KCB4095.....C-19/52
KCB4806.....C-15/59
KCB4088.....T-3/50

KRIS
XL25.....T-2/43

LAFAYETTE
COMSTAT.....T-11/45
DYNA-COM 40.....T-11/44
CHB740.....T-15/60;16/55
HB640.....T-2/43
LM-100.....T-12/36
LM-300.....T-12/37
MICRO-723.....T-19/42
SSB75.....C&S&T-14/9
SSB140.....C-8/18;T-11/44
TELESTAT 1240.....T-5/14
2400 FM.....M-19/59

LAKE
400.....C-16/52;19/33
410.....T-12/37
450.....T-12/37
600.....T-12/37

VOL/PG

LINCOLN
1500.....SC-22/55

MAJOR
MI20....SC,T,FC-19/23,29,43
.....M-21/52

MARCO
CB-444..SC,T,FC-19/21,30,43
.....M-21/52

MECCA
BCB-6 (23 ch).....T-20/41

MECTRON
ME400.....C-17/34
ME502.....C-14/41

MEDALION
63-240.....C&T-3/50

MIDLAND
CAP 858.....C-3/30
100M.....T-10/67
102M.....T-14/42;17/59
103M.....T-17/65
150M.....SC-21/62;T-7/52
13-853.....T-22/18
13/857.....C-11/36
13-858.....T-14/42
13-862.....C&T-14/48-49
13-863B.....T-20/41
13-867.....T-13/62;19/42
13-879.....T-14/50
13-881.....T-15/61
13-882C.....C-13/62;15/35
.....T-13/62
13-883B.....C&S-12/4
13-892..S-4/48;11/13;T-4/48
13-893.....S&T-4/51
13-898.....S-1/36
13-898B.....S-1/35
63-445.....T-11/45
76-858....C-16/21-24;T-3/49
76-860.....T-14/51
76-863.....C&T-3/50;9/33
77-101B.....T-8/44
77-101C.....T-12/38
77-104.....M-21/52;T-21/16
77-155.....T-23/27;SC-23/26
77-808.....T-18/51
77-821.....C&T-3/42
77-824.....T-8/44
77-824B.....T-12/38
77-824C.....T-12/39
77-830.....C-20/56
77-838.....T-9/33
77-849.....C&T-3/50
77-853.....T-16/55
77-856.....T-11/45
77-861.....C-12/26;T-3/50
77-861B.....T-11/45
77-865.....T-9/33
77-899.....T-9/33
77-963.....C&T-3/42
78-574.....C&S&T-14/10
.....T-9/38;12/39
78-999.....S&T-12/5
79-012.....C&S&SC-23/16-19
79-891.....S-12/6;T-12/5
79-892.....C-15/36-38
.....S-11/14;T-3/49
79-893.....C&T-2/20
79-900.....C-5/47;18/62
.....S-5/47;T-9/33-34
1001.....T-17/65
2001(EXPORT)..SC&T-19/26&29
3001.....T-12/37

CODES: A - ALIGNMENT PROCEDURE; C - CONVERSION; FC - FREQUENCY CHART; M - MISCELLANEOUS INFORMATION; S - SLIDE; SC - SCHEMATIC; T - TUNE UP.

VOL/PG

MIDLAND (cont.)
4001.....T-7/52
5001.....T-12/37
6001 (OLD) 79-006...C-11/16
.....C-16/60-62;22/48-49
.....S&T-11/16
7001 (OLD) 79-007..C&S-8/21
...C&S&T-11/16;C-16/60-62
.....C-22/48-49;T-11/45-46

MOPAR
4094173.....T-3/51
4094176.....C&T-3/51
4094177.....C&T-3/49
4094178.....C&T-3/60

MORSE
2001.....T-14/42
3005.....C-2/27

MOTOROLA
CB555.....C&S&T-12/7
DC975AX.....T-16/40
DF925AX.....T-11/46
DX540.....T-18/27
MOCAT 40.....T-11/46
T4000A/05A/10A/20A...T-3/50
T4025A.....C-10/46

MULTIPLEX
SAME AS PALOMAR 2400 EXPORT

NESCO
1249.....C-6/38

N. D. I.
PC-102.....T-11/46
PC-200.....T-7/52
PC-201.....S&T-12/8

OMNIVOX
CB-1000.....T-18/66

ORBITSONIC
200.....C&T-21/37

PACE
CB144.....T-14/42
CB166..C&T-15/42,60;T-19/42
1000.....S-1/37-38
1000MC/1000BC....C-15/39-41
DX1023B.....S-1/39
2300C.....C-19/33
8003.....T-11/47
8008.....T-2/43
8010A.....C-15/43;17/60-61
8015A.....C-15/43;17/60-61
8016.....T-11/47
8025.....C-15/44;T-19/42
8041.....T-19/33
8046.....T-9/33
8092.....C-6/35-36;S-6/37
8093.....C-15/48
8113.....T-12/39
8117.....T-11/47
8155.....C-15/43;19/33
.....T-9/34;12/40
8193.....S-12/9;T-7/52

PACIFIC SSB
800 SSB....C-18/16;19/57-58
M-21/41;S-18/15;SC-19/55
.....T-16/55;19/29

PALOMAR
21.....T-22/18
49.....T-3/60
500...C&S&T-4/19-20;5/32-36
.....C-8/21
500B.....T-18/67

VOL/PG

PALOMAR (cont.)
2400 (EXPORT)....A-18/30-33
.....M-17/42;SC-20/38
4100.....C&T-3/54
5000 (ref. 2400)....M-20/64

PANASONIC
CR-8474EU(AM/FM/CB)..T-9/34
RJ3150.....C-18/18
RJ3200.....T-14/42
RJ3250.....T-11/47
RJ3600.....C-10/57;T/11-48
RJ3660.....C&M&T-14/52
RJ3700.....C&S&T-13/16-17

PEARCE-SIMPSON
BENGAL.....S-1/40
CHEETA....C-1/31-32; S-1/40
COUGAR 23.....C&M&T-14/53
JAGUAR 40B.....T-19/42
LEOPARD B.....T-3/49
PUMA 23B.....T-13/62
SIMBA.....C-1/31-32;S-1/40
SUPERTIGER 40A.....C&T-3/60
TIGER 23C.....T-20/41
TIGER 40A.....T-9/34

PIONEER
GT-100G AM/FM/CB....T-10/62

PRESIDENT/UNIDEN
ADAMS...C&S&T-2/16;13/18-20
.....M-21/40;EXPORT-23/36
ANDREW J.....T-9/34
DWIGHT D.....C&T-10/62
.....S-15/62;T-14/54
GRANT(OLD).C&S&T-1/22-23,59
...C&S-2/17,23-26;C-21/31
GRANT(NEW)....C&S&T-5/24-27
.....C&S-13/21-22;S-8/34
HOME Ch. CONV...14/13-17
GRANT-DX.....C&S-19/34-36
....SC-19/24;T&M-19/29,68
.....C-20/22,40;S-20/24
....A-20/47-51;S-21/42-44
JACKSON-DX.C-20/31-35;21/41
C-23/20;A-20/43-46;T-19/30
M-20/30;21/22,27,36;23-1321
....S-20/28-29;FC&SC-19/8-9
JAMES K.....T-7/52
JAMES K (NEW).....T-12/40
HONEST ABE.....C-1/60
JOHN Q.....C-1/60
MADISON (NEW).....C&S-10/30
MCKINLEY.....C&S&T-4/12-13
.....S-6/64
MCKINLEY (NEW)....C&S-10/29
OLD HICKORY.....T-9/34
SEAHAWK 40.....A-22/9
TEDDY R.....C-1/60
WASHINGTON.C&S&T-1/22-23,59
WASHINGTON(NEW)..C-10/28-29
.....S-6/64;8/33-34;10/28
ZACHARY T....C-1/60;T-14/54
AR 7.....M-22/39;T-12/40
AR 44.....T-10/63
AR 144.....C&S&T-10/41-42
.....C-11/17-18;21/28-29
AR 711.....T-12/34
AX 7.....T-12/45
AX 11.....A-22/51;T-12/45
AX 14.....T-12/45
AX 43.....A-22/9
AX 44.....A-22/9;T-12/45
AX 52.....T-12/45
AX 55.....T-12/45

VOL/PG

PRESIDENT/UNIDEN (cont.)
AX 144...C-21/28-29;A-22/10
.M-23/59;SC-23/40;T-12/45
AX 711.....T-12/40&45
PC 3.....M-19/68
PC 9.....M-22/39
PC 22.....A-22/51
PC 33.....T&M&SC-19/40-41
.....C-21/24&34;A-22/8
PC 43.....A-22/9
PC 55.....SC-20/60;T-20/53
.....C-21/24;A-22/8
PC 66.....A-22/9;SC-22/57
PC 77.....SC-20/59;T-20/53
.....C-21/24;A-22/8
PC 244.....A-22/10
.....SC-21/63&23/40

RCA
14T270.....T-9/36
14T300.....T-2/43
14T302.....C-4/36;5/11&39
.....S-4/49;T-3/53
14T303.....T-11/48

RAIDER
4060.....C-15/46

RAY JEFFERSON
CB-845.....C-12/27;T-11/48

REALISTIC/TRC
45A.....T-4/37
47.....S-1/41;T-1/21
48.....S-1/42
50B.....T-22/18
57.....C-20/42;S&T-12/28
83.....T-19/42
86.....T-21/35
99A.....T-4/37
100.....T-4/37
180.....T-4/37
200.....T-4/37;10/63
204.....T-10/63
205.....T-12/40
206.....T-14/55;19/42
208.....T-21/35
209.....T-10/63;12/49
210.....T-16/32;M-19/47
211.....T-17/34
212.....T-17/34
214.....T-21/35
410.....T-12/29
411.....T-15/60
412.....T-19/42
413.....T-21/61
414.....C-21/24,51;T-19/42
420.....T-12/41
421.....T-8/44;12/41
421A.....C-21/42,51;T-9/35
422.....T-8/45
422A..C-21/24,51;T-10/64,67
424C&T-3/57&9/35;C-23/41-44
425.....T-7/53;10/67
426.....T-10/64
427.....T-8/45
428.....T-11/48
431.....C-7/23-24;T-4/37
.....C-20/8-15
432.....T-11/48
433.....T-22/33
440.....T-8/45;9/35
441.....C-20/23,42
.....T-10/67;11/49
448.....C-11/19;16/25-30
.....S-11/19;17/54

VOL/PG

REALISTIC/TRC (cont.)
448.....T-3/51;10/64;11/19
449.....C&T-3/51;9/35-36
450.....C&S-10/31
451..C&S&T-12/10-13;T-18/26
452.....C&T-3/52;T-1/21
453.....SC-23/39
454.....T-8/45
455..C-12/30;C-20/23;T-3/60
456.....T-10/67
457...C&S&T-10/36;T-9/35-36
458.....S-8/39-40;T-9/35
.....M-21/40
459.....C&S&T-10/32-35
461.....C&T-3/51
462.....T-9/36
466.....T-3/51
468.....T-3/57
470.....T-9/39;12/41;16/40
471.....T-8/45
473.....T-20/53
480...C&S&T-10/37-38;T-7/53
490..C&S&T-12/14-15;T-11/49

REGENCY
CR240.....T-16/32

ROADRUNNER
CB5000A.....T-16/41

ROBERTS
40 Ch.....T-14/42

ROBYN
007-140.....T-3/52
AM 500D.....T-3/52
DC 130D.....T-3/56
GT 410D.....T-3/57
GT 440D.....C-1/23
LB 120.....T-3/52
SB 505.....C&S&T-5/41-42
SB 520D.....C&T-2/21-22
SB 540D...C-5/19,36;7/25-28
.....S-5/19
SX 401.....C&T-3/57
SX 402D.....C&T-3/57
T240D.....S&T-13/63
.....T-3/56;13/60
WV 23.....C-1/24-25
WV110..C-12/31;T-3/56;11/50

ROYCE
580.....T-16/32
582.....T-12/42
604.....T-3/56-57
607.....T-12/42
611.....T-14/55
1-600.....T-19/64
1-601.....C-1/26
1-612.....C-5/45-46
1-617.....C&T-3/52
1-619.....T-3/56
1-621.....T-3/57
1-625.....C&T-3/56
1-632.....C&S&T-11/21
.....C&S-13/23;S-5/14
1-639.....C-15/48;T-12/41
1-641.....C&S&T-11/20
.....S&T-4/51;T-3/60
1-642...C&S&T-13/24;T-18/51
1-650.....T-14/42
1-651.....T-7/55
1-655.....C-15/47;T-11/50
1-660.....T-2/42
1-673.....C&T-3/52
1-675.....C&T-3/53
1-680.....C&T-3/52

CODES: A - ALIGNMENT; C - CONVERSION: FC - FREQUENCY CHART; M - MISCELLANEOUS INFORMATION; S - SLIDE; SC - SCHEMATIC; T - TUNE UP.

VOL/PG

SANYKO
SCS-555.....C&S-11/40

SBE
LCB-8.....T-12/43
LCBS-4.....C&S&T-7/29-33
LCM-5.....T-9/36
LCM-8.....T-9/36;12/42
LCMS-4.....C&S&T-7/34-37
LCMS-8.....T-12/43
CATALINA II.....T-21/16
CONSOLE II...C-15/49;S-1/48
CONSOLE IV....C&S&T-2/28-40
CONSOLE V.....C&S&T-2/28-40
.....T-15/61
CONSOLE VI.....C-8/14
CORTEZ.....C&T-14/56-57
CORTEZ 40.....C&T-3/61
FORMULA D.....C-1/49
FORMULA D 40.....T-3/61
MALIBU 40.....T-9/36
SIDEBANDER II.....C&S-1/47
SIDEBANDER IV.C&S&T-2/28-40
SIDEBANDER V..C&S&T-2/28-40
SIDEBANDER VI.....C-8/14
STOWAWAY (47CB)....C&T-3/53
TAHOE 40 (49CB)....C&T-3/53
TOUCH/COM.....C-1/50-51
TOUCH/COM 40 (43CB)..T-3/53
TRINIDAD III...T-3/61;15/61

SEARS
23 Ch. SSB.....S-1/44
CM-6000LA.....T-3/59
CM-6000LC.....T-3/59
D63911 (861C).....C-12/26
ROADTALKER (SM5104).S-12/18
370-38050700.....T-3/54
562-38200700.....C&T-3/55
562-38220700.....C-10/56
663-38020800.....T-7/53
663-38030050.....T-21/60
663-38070700.....T-3/61
663-38100050....C&S&T-11/22
.....C&S&T&FC-21/13-17
663-381050.....T-11/21
934-3671160.....T-21/60
934-36740500.....T-18/57
934-36760600.....C-22/22
934-3677150..C&S&T-12/16-17
934-36772600.C&S&T-12/16-17
934-38060700.....T-17/65
934-38061700.....T-11/50
934-38062700.....T-10/65
934-38080700.....T-9/37
934-38081700.....T-9/38
934-38120700.....T-3/61
934-83260700.....C-6/26-27
.....C-11/23;C-23/28-33
.....S-10/52;T-7/53
934-38270700....C&S-5/28-29
.....C&S-9/20-22;T-7/54
934-38310700....S-5/19;9/22
.....T-7/54-55

SHAKESPEARE
GB240.....T-3/53

SHARP
CB-23.....T-13/63
CB-700.....T-20/41
CB-750A.....C-19/52
CB-800.....T-2/42
CB-2170.....T-12/43
CB-2460.....M-21/60;T-18/57
CB-4370/4470.....T-12/43-44

VOL/PG

SHARP (cont.)
CB-4670.....T-7/55
CB-5470.....C&S&T-11/24

SILTRONIX
SSB.....S-1/45
1011C.....C-1/46
1011D.....C-1/46

SOMMERKAMP
TS-788DX.....C-13/25-30
TS-3400X...A-20/39;SC-20/58

SONAR
FS-2340.....C&T-5/31

SPARKOMATIC
CB4020S.....C-14/41
SR-42/CBM.....T-3/54

STANDARD HORIZON
29.....T-1/22
29A.....C-5/59;C&T-13/63

STONER
PRO-40.....C&S-4/52-53

SUPERSCOPE AIRCOMMAND
CB-340.....C-8/19;9/24
CB-1040.....T-14/57

SUPER STAR
95.C-19/45;SC-19/19;T-19/30
120AM.....C-20/25;SC-20/62
.....T-20/29
120 AM/FM.....C-20/27
360 FM...C-21/18-19;SC-18/4
1700.....M-22/21;23/25
.....A&T&M-23/10
2000.....C-18/28
2000(50 Ch Select).SC-21/56
3600FM.....M-21-44
3600 (LOW BAND)..A-22/25-27
....C-22/34-35;M-22/23,31
3900 (HIGH BAND).A-22/28-30
....C-22/40-41;M-22/23,31

SUPER TINY
23.....T-22/18

SURVEYOR
620.....T-3/55
2610.....C&T-3/54

SWAN SIGNET
270.....C-5/58

TEABERRY
52 CH CAPABILITY.....C-1/43
CAP MOD.....C-5/30
BIG T.....T-15/61
MODLE T.....C-4/3-4;T-3/55
.....M-19/68
RACER T.....C-1/58;T-3/55
RANGER T....C-4/1-2;6/24-25
T BEAR.....C-4/14-15
T CHARLIE.....T-10/65
T COMMAND.....T-3/55
T DISPATCH.C-4/14-15;T-3/55
TITAN T...C-4/14-15;T-15/61
STALKER I.C1/57;4/5-6;10/11
STALKER II.....T-1/21
STALKER III.....T-7/55
STALKER IV.....T-12/44
STALKER V.....T-7/55
STALKER VIII.....T-10/65
STALKER IX.C-4/7-9;15/55-57
.....S-4/7-8;T-10/65
STALKER IX (EXPORT).....
.....C-15/50-54;SC-19/20

VOL/PG

TEABERRY (cont.)
STALKER XII.....T-7/56
STALKER XV.....C&S-4/7-9
.....C&S&T-10/39
STALKER XX.....C&S&T-10/40
STALKER 101/202.....S-4/10

TENNA
10901.....C-15/63;T-10/58
10902.....T-10/65
11302 AM/FM/CB.....T-9/37

TRAM
D12.....C-10/56;T-3/54
D42.....C-4/47;5/40;19/52
D60.....C&S-1/52-53
D62.....S-10/45-46;15/15-17
.....C-19/52
D64.....C-11/12;S&T-13/31
D80.....C-10/30
D201....C-1/56;3/22-23;4/48
.....C-17/53
D201A....C-3/23;10/54;17/53
D300.....C-8/11-13;S-12/19
XL-5.....T-16/32
XLR (23 SSB).....C-17/53

TRISTAR
727.....SC-19/22;T-19/30
747.....C-15/58;16/68
.....S-17/35;A-19/48-51

TRS CHALLENGER
432.....T-4/23
460.....T-4/27-28;14/59
600.....T-4/27,29;9/37
730.....T-4/27,30
850.....C&S&T-4/21-27,32-35
.....S-16/55;T-7/55
1200.....T-4/27,31;12/44
1400....C&S&T-4/21-27,32-35
.....S-16/55

TRUETONE
CYJ4832-A-87.....T-2/43
CYJ4837-A-87.S-11/14;T-3/59
CYJ4862-A-87.....T-9/39
MCC4434-A-57.....T-14/60
MCC4726-A-67.....T-15/61

UNIDEN (see PRESIDENT)

UNIMETRIC
DOLPHONE.....T-18/65

UNIVERSE
CB747.....M-21/16

USACO
U900CB.....T-10/53

UTAC
TRX-30.....T-22/18
TRX-400.....C&T-3/59
TRX500.....C&T-3/56

VECTOR
X.....T-2/43
770.....C-4/56-57;T-9/37
790.....C-4/58-59;T-9/37

WARDS
GEN-680A.....T-14/61
GEN-696A.....T-14/61
GEN-716A.....T-22/18
GEN-719A.....C&S&T-11/10
GEN-730A.....T-22/18
GEN-774A.....T-22/18
GEN-775A.....T-3/61

VOL/PG

WKS
100.....T&SC&M-19/64,66,67

XTAL
XCB-71.....T-21/32
XSSB-10.....T-1/22

YAESU
101.....C-5/58
FT-7B.....C-7/38-41
FT-102.....C-18/25
FT-707.....C-10/20-24
FT-726R.....C-21/27
FT-757GX....C-18/16;M-21/27
FT-757GX-SX.....C-19/52
FT-901.....C-6/3-12

****

VOLUME 1

PAGE #
CRYSTAL CROSS REFERENCE GUIDE..... 5-10
LETTER CHART FOR CRYSTAL FREQ. CORRELATION..... 11-18
GOLDEN EAGLE MARK IV PING MODIFICATION..... 20
GENERAL INFORMATION..... 63-67
LINEARS..... 68-70

****

VOLUME 2

PAGE #
NEW CRYSTAL CROSS REFERENCE GUIDE..... 5-9
LETTER CHART FOR CRYSTAL FREQ. CORRELATION..... 10-13
PRESIDENT GRANT RF GAIN & ADJ. CH. REJ. MOD..... 18-19
ROBYN 510D/520D NOISE BLANKER ALIGNMENT..... 25-26
COBRA 139XLR SERVICE BULLETIN ON CRYSTAL
DRIFT PROBLEM & PCB CRACKING..... 45-50
SERVICE BULLETIN ON SIDEBANDER II & CONSOLE II
FOR IMPROVING CROSS MODULATION REJECTION..... 51
SERVICE BULLETIN - COBRA 29 ON MODULATION
IMPROVEMENT, ALSO NOISE BLANKER..... 52
ANTENNA REPORTS..... 53-55
BETA-COM INFO (UPGRADING 23 CHANNEL RADIOS)..... 57-87

****

VOLUME 3

PAGE #
PRESIDENT MADISON FREQ. COUNTER MOD..... 16-18
NOISE WHINE CURE..... 24
MICROPHONE WIRING INSTRUCTIONS..... 26-32
PLL CHANNELIZER..... 33-40
ANTENNA SECRETS..... 63-64
SPECIAL SECTION ON LINEAR AMPLIFIERS:
50-70W MOBILE..... 66
300-400W BASE..... 67-69
70W BASE..... 70-71
EAGLE 200..... 72
EAGLE 500..... 73
CONVERSION FROM AMATEUR TRANSMITTER TO LINEAR AMP 74
LINEAR AMP PROBLEMS & SOLUTIONS..... 75-76

****

VOLUME 4

PAGE #
HOW TO BUILD YOUR OWN RELAY MODULE..... 16
02A CHIP INFORMATION..... 54-55
HINTS & KINKS ON COBRA 62XLR & 142GTL..... 61
TURNER MIC EXPANDER (500AMC DISABLE)..... 62
KAO BLINKIE..... 63
SUNSPOT PREDICTION CHART..... 64
LINEAR REPORT SECTION:
D & A MAVERICK..... 65
D & A 500 TRIPLE CONVERSION..... 65
EAGLE 515 MODIFICATION..... 66-67
UNIDEN SSB 10 METER POWER CONVERSION..... 68-70
SUPER CLARIFIER DIODE..... 71

****

VOLUME 5

PAGE #
10 METER CONV. WITH MICROMONITOR..... 1-5
ECHO BOX..... 6
250 WATT DUMMY LOAD-"SECRET CB'S LITTLE DUMMY"... 7
BUILT IN POWER MIKE..... 8-9
5-MILE SIMULATOR..... 10
RECEIVER PRE-AMP..... 11
GLEN DIGITAL CONTROLLER..... 12-13
GETTING SWR DOWN ON BASE ANTENNAS..... 15
APARTMENT ANTENNA..... 16
GROUNDING MOBILE RADIOS..... 17
DAK MARK IX POWER MODIFICATION..... 21-23
SUPER POWER MODULATION MOD FOR BOWMAN BASE CBH990 43
THE ART OF WIDEBANDING 858 CHIP..... 44
CONVERSION KIT + MARS & CAP FOR SSB..... 48-49
CONVERSION OF AM/SSB TO 10 METER AMATEUR..... 52
REDCO UFO INSTALLATIONS..... 61-69
HINTS & KINKS - COBRA 140/142/148GTL
REGULATOR IC SHORTING OUT..... 70
SLIDE INCREASE, ALL SSB RADIOS..... 71

****

VOLUME 6

PAGE #
PLL CRYSTAL CROSS REFERENCE GUIDE..... 1-2
SECRET CB TEST TONE..... 13
ERRONEOUS SIGNAL LOCATOR..... 14
LOW COST AMATEUR CONVERSION FOR 10 METERS..... 15
BASE ANTENNA GROUNDING..... 16-17
SUPER CLARIFIER 10-TURN POT..... 22
THUMBWHEEL 200 CHANNEL CONV. FOR 858 CHASSIS..... 31-34
REDCO UFO APPLICATIONS..... 40-52
SPECIAL SECTION ON LINEAR AMPLIFIERS:
PDX 400..... 54
D & A MAVERICK 250..... 55
MACO DUSTER 300, 750 & 1000 TRANSMITTER..... 56-57
MACO 75..... 58
500 CX & 700 CX 10 to 11 METER CONVERSION..... 58
RDX-75..... 59
HDX-50..... 59
MDX-200..... 60
PDX-400..... 61
10 METER EXPERIMENTER BOARD INFORMATION..... 62-63
HOW TO MAKE CYBERNET CHASSIS SLIDE..... 65
HOW TO HOOK UP GLEN 310 to PRES. WASHINGTON..... 67
SUPER CLARIFIER HINTS..... 66
REDCO DX-50..... 68-70

****

VOLUME 7

PAGE #
HOW TO MAKE YOUR EAGLE SCREAM..... 14
IMPROVED SLIDE MOD FOR 02A SSB RADIOS..... 42
UPDATED 200 CHANNEL AMATEUR CONV. FOR 858 CHIP... 43-48
10 METER CONVERSION FOR SSB RADIOS USING MB8719.. 49-50
HOW TO MAKE YOUR 858 CHASSIS SLIDE..... 56
LINEAR AMPLIFIER NOTES..... 57
RECEIVE AMP - SILTRONIX..... 58-59
ECHO BOX SPEECH PROCESSING FOR TRC-449..... 60
ADDING PING..... 61
CORRECTION TO THUMBWHEEL 200 CHANNEL CONV..... 62-63
MICROMONITOR TECH NOTES..... 64-69
MICROMONITOR INSTALLATION FOR RADIOS USING 858... 70-71
AMP FOR RF PROBE..... 72
OSCILLOSCOPE MOD FOR RF & MODULATION DISPLAY..... 73
THE BANDIT ANTENNA..... 74-76
SECRET CB'S OWN "TROUBLESHOOTER"..... 77

****

VOLUME 8

PAGE #
WHAT'S NEW ON THE ELECTRONICS HORIZON?..... 1-6
UHF FM CB (GMRS)..... 7-10
UNIDEN MB8719 PLL CHIP FREQUENCY CONVERSION..... 15
FREQUENCY MOD FOR J.C. PENNEY, COLT, LAFAYETTE,
HYGAIN, ETC..... 18
BROWNING MARK IVA MOD & UFO INSTALLATION..... 22-23
BROWNING MARK IV TRANSMITTER TROUBLESHOOTING..... 25-32
LINEAR AMPLIFIER NOTES:
INSTALLING A TROUBLESHOOTING LINEAR AMPS..... 47-49
10 METER AMP BOARD MOD TO UPRIGHT DRIVER..... 50
YOU CAN BUILD IT:
TWO TONE GENERATOR..... 51
YAESU 601 (B) FREQ. COUNTER MOD. TO READ
CB LOW, MIDDLE, HIGH FREQ..... 52-54
RF TEST METER..... 56-67
REDCO UFO MODIFICATION (from 20 to 29.995 MHz)... 55
SECRET CB'S POWER VECTORING..... 58
HOW THE ECHO BOX CAN ACTUALLY SURPASS THE
POWER OF A LINEAR IN SSB..... 59
MICROMONITOR QUESTIONS..... 60-62
MICROMONITOR INSTALLATION INSTRUCTIONS:
SM5104 PLL..... 63-64
ICOM 22S..... 65-67
NEW PRODUCT RELEASE:
ZAPPER 9000 MOD. & REFERENCE CHART..... 68-69
REDCO DIGI-SCAN UFO ELITE..... 70
CHOPPER CHARLIE ANTENNA..... 71
TROUBLESHOOTER..... 73
AMATEUR VSB-1 (VOICE SIGNAL BOOSTER)..... 82

****

VOLUME 9

	PAGE #
SSB'ER LOSE OUT AGAIN	1
FCC ANNOUNCES PLANS FOR SIDEBAND	2-3
FCC DELAYS NPRM: SSB FREQS. DOUBTFUL	3-4
SPEED-O-MATIC "SPEEDO-1" X-BAND RADAR GUN	5-6
CONVERSION TIPS FOR ALL SSB RADIOS	7
RELAY CRYSTAL SWITCHING	25-26
LETTER FROM A FRIEND	27-28
HINTS & KINKS-ELECTRONIC CRYSTAL SWITCHING	29
SOLVING T.V.I	40-42
RADACRUZ	42
IMPORTANT FACTS ABOUT ECHO BOXES	43-44
VOICE SIGNAL BOOSTER (VSB-1) INSTALLATION	45-48
POWER SUPPLY MODIFICATION FOR REALISTIC PRE-AMP NOISE-CANCELLING MIKE #21-1175	49-50
HINTS & KINKS - SWITCHABLE MODULATION INCREASE	51
RF ATTENUATOR	52-54
PRESIDENT SERVICE BULLETINS	55-61

****

VOLUME 10

	PAGE #
SECRET CB TROUBLESHOOTER	2-4
VOICE SIGNAL BOOSTER - VSB-1	5-19
REPLACING MB8734 with MB8719	35
uPD2816C PLL PIN OUT	42
TECH TIPS ON 858	55
UNCONVERTIBLE CHIP LIST	66
LINEAR SUGGESTIONS	68-69
ZAPPER 9000 INSTALLATION HINTS	70
CB PARABOLIC TYPE ANTENNA	77

****

VOLUME 11

	PAGE #
CPI ALC MODIFICATION FOR INCREASED SSB POWER	9
HOW TO ADD RF GAIN CONTROL TO A CPI 300/400	11
VSB-1 UPDATE ON NEW GRANT AND MADISON	25-26
NEW FRONTIER: FM CB	27-29
NEW PRODUCT: DIGI-SCAN DS-400	30-31
SERIAL DATA/PLL FREQUENCY SYNTHESIZERS	32
UNCONVERTIBLE AT THIS TIME : GE 3-5900A/TC9101P	33
ADD CH 9 & 19AT TO COLT 210	33
ZAPPER 9000 INSTALLATION UPDATES	34
RADIO MODULATION ADJ. FOR VARIOUS MODELS	51-53
HINTS ON SERVICING	54
SERVICE NOTES-GOLDEN EAGLE MARK IV TRANSMITTER	55
D104 & D104M6 ASTATIC MIKE MODIFICATION	55
HOW TO SOLVE NOISE PROBLEMS	56-57
MORE ON THE "TROUBLESHOOTER"	57
NOISE IN DIESEL TRUCKS	58
IN HOUSE VALUE LISTING	59
TRUCKERS SPECIAL POLARITY PROTECTOR WITH SMARTS	60
HOW TO BUILD:	
LOW PASS FILTER	61
20dB ATTENUATION PAD	61
BALUN COIL	62
1000Hz TONE	63
ADD A SECOND BATTERY	64
20 AMP POWER SUPPLY	65
SIGNAL INJECTOR	66
CMOS LOGIC PROBE	67
REFERENCE OSC-DIVIDER	68
READOUT MODIFICATION	69
ASTATIC MIC MOD	70
BILATERAL SWITCH	71
PLL PINOUT DIAGRAMS	72-77
THE "BANDIT ANTENNA"	53

****

VOLUME 12

	PAGE #
ADD A FINE TUNE TO YOUR CLARIFIER (LIKE 2000)	20
SIMPLE CURE FOR RX-TX TRACKING PROBLEMS	21
VSB-1 HOOK-UP: STALKER XX,TRC490,WARDS 719A	25
MODULATION ADJUSTMENTS FOR VARIOUS REALISTICS	33
ZAPPER 9000 REFERENCE CHART	46
ZAPPER 9000 TROUBLESHOOTING HINTS	47-48
TC9106 PLL OPERATION ANALYSIS	50-53
SPREAD EAGLE ANTENNA FOR TRUCKERS	54-55
BASIC PLL	56
ELECTRONIC TERMINOLOGY	57
SCANNER PROGRAMING TIPS	58
INTO THE KNOW WITH JAPANESE SEMICONDUCTORS	59
TRANSISTOR SPECIFICATIONS	60
RESISTOR COLOR GUIDE	61-62
CAPACITOR CODES	62
YOU CAN BUILD:	
"SECRET CB" SUPER DUPER POWER SUPPLY CONTROLLER	63
AUDIO TEST STATION	64
POWER LINE FILTER - T.V.I. FILTER	65

****

VOLUME 13

	PAGE #
INTRODUCING THE SOMMERKAMP TS-788DX	4-9
MB8719 PINOUT	32
AGC SELECTOR SWITCH	38
BUILD VCO BLOCK - CYBERNET 02A CHASSIS	39
HOW TO HOOK UP A 10 TURN POT TO 2000 GTL	40
2824C OPERATION ANALYSIS	41-43
VSB-1 HOOK UP: TRC-488, MIDLAND 77-0004 4001	43-44
TROUBLESHOOTING CLARIFIER PROBLEMS ON THE 858	45-47
SUPER REGULATOR	48
BUILD A RECEIVER PREAMP	49
LINEAR NOTES	50-51
MODULATION GUNN OSCILLATOR	52-56
CYBERNET 02A AM POWER INCREASE	59
REALISTIC DX300 (20-204)	64
BEARCAT 250	65

****

VOLUME 14

	PAGE #
MB8719/11.3258 TRUTH TABLE	15-17
FM-308 THRU-LINE FREQ. COUNTER	18-19
"KIT A" FOR LC7130/7131 & TC9106P CHIPS AND INSTALLATION INSTRUCTIONS	20-40
BROWNING PING INFORMATION	41
25-29 MHz FREQUENCY ASSIGNMENTS	62-63
ELECTRONIC TERMINOLOGY	63
YOU CAN BUILD:	
FET RECEIVER PRE-AMP	64
BUILD YOUR OWN SPACE SOUND	65
BUILD AN AMPLIFIER (150 WATT)	66-67

****

VOLUME 15

	PAGE #
NEW MICROSCAN PLUS SYSTEM	5-6
BREAKING THAT CHIP	7-11
02A TRUTH TABLE	12-13
MEASURE FREQUENCY ON SCOPE	17
PM77 POWER MODULATOR KIT	19
DIGITAL PROCESSOR KIT/uPD2824	28
WIRE GAUGE CONVERSION CHART	41
02A 23 CHANNEL AM MOD	59
POWER MOD. FOR AM UNITS	65
PRE-CONVERSION TIPS	70
CONVERT A SALVAGED METER TO VOLT METER	71
STATE/INTERNATIONAL DISIGNATORS	72

****

VOLUME 16

	PAGE #
VSB-1 UPDATE FOR COBRA 2000	6
SAMS CB MANUAL - OUT OF PRINT	7
CALL SIGNAL/FREQUENCY CHARTS	9-20
HINTS/KINKS/GOOFS	31
M58472P PLL CHIP MOD	33
OSCILLATOR CHECKER, LOW CAPACITY PROBE	34
TROUBLESHOOTER GUIDE	35-36
INTO THE KNOW WITH POTS	37
"MY WAY" SLIDE	38
BLEED-OVER FILTER	40
LOOP FILTER - WHAT IS IT?	42
COLOR CODE GUIDE FOR CHOKES	42
ANTENNA INFORMATION	56
02A CLARIFIER/BANDSWITCH MOD	57-59
HIGH CURRENT METER	63-64
SWR VS REFLECTED POWER CHART	65
CUSTOM FREQUENCY STANDARD	66-67
CHECKING MODULATION	69
DIGITAL PROCESSOR KIT (#146) UPDATE	70-71

****

VOLUME 17

	PAGE #
"B" KIT FOR LC7130/7131 & TC9106P CHIPS AND INSTALLATION INSTRUCTIONS	4-33
SECRET CB KIT #106 FOR TRC-451	36-38
M58472 PLL CHIP (UPDATE)	39
FORGOTTEN ACCIDENT (23CH XTAL CONV. INFO)	39
HINTS/KINKS/GOOFS	46
U-BUILD IT: BURGLAR ALARM	48
U-BUILD IT: CUSTOM REGULATED POWER SUPPLY	49-50
GYPSY FREQUENCY CHART/KIT INFO	51-52
PLL CHIP INFO	59
REALISTIC PRO-54 SCANNER (D.C. MOD.)	62-64
VIDEO "DUBBING/COPYING" TIPS	64-65
VCR VIDEO MOD. TRS-80 VIDEO DISPLAY	66-69

****

VOLUME 18

	PAGE #
EXPORT ROUNDUP INFO	5-12
MB CHASSIS SERVICE NOTE	13
CAUTION-CIRCUITS-QUICKIE	14
SM5104 PLL FREQUENCY MOD. (AM CHASSIS)	20-21
10KHz FLIP-FLOP	23
REALISTIC PRO-22 (SPECIAL NOTES)	33
PARTS INFO: LAFAYETTE,COLT,SBE,PALOMAR	34
TROUBLE SHOOTING TABLES - SSB UNITS: REC86345, 02A (2-BOARD), 858, 8734/8719, 2824/2816	35-39
LINEAR TIPS FOR SQUEAL ON TX	41
HINTS/KINKS/GOOFS	42
ROBYN OWNERS-PARTS SOURCE & TECH NOTES	43
HELP WANTED	43
861 PLL AM CHASSIS (UPDATE)	45
CONVERSION CHARTS	46
MB8719 WITH 11.1125 CRYSTAL INFO	47
RADIO SHACK MIKE WIRING	48-49
$MONEY MAKERS$	50
ANTENNA TUNING	51
KIT 137 INSTALLATION INSTRUCTIONS & SPEC	52-53
LARK FREQUENCY CHART	54
SAMS CB/SCANNER MANUAL '84 UPDATE	55
$$INDIVIDUAL I.R.A. - TUBES$$	57
SURVEY RESULTS	58-59
SAVE THE CHIP-MAYBE THE METER	60
REMOTE CONTROL OF AMPLIFIER	61
THINK SMALL! CRYSTAL INFO	62
VIDEO (UPDATE)	63-65
ANTENNA MOUNTING-MOBILE	66
VOLTAGE REGULATOR DESIGN	69
ALL ABOUT CRYSTALS	70

****

VOLUME 19

	PAGE #
EARS	5-7
EXPORT ROUNDUP	10-17
EDITORS NOTES	18
CAUTION-DOUBLE BOARD EXPORTS	31
DOUBLING-UP FOR CURRENT	31
CROSS-REFERENCE ON SAMS CB MANUALS	32-33
SERVICE TIPS - EXPORT - CYBERNET 02A PLL	37
GEORGE FREQUENCY CHART	38-39
ALPHA FREQUENCY CODE CHART	43
POLARITY PROTECTOR AND OVER-VOLTAGE PROTECTION	44
DUOFONE ET-350 (R/S 43-366)	45
HOW TO ORDER CRYSTALS	47
"SECRET CB" SUPER CLARIFIER DIODE & SUPER SLIDE	53
BONUS - HAVING TROUBLE BROADBANDING ON UNITS?	54
ROYCE OWNERS PARTS INFO	54
CORRECTION FOR 10KC FLIP-FLOP, V18/P23	54
HINTS/KINKS/GOOFS	55
FREQUENCY CHART FOR 10KHz FLIP FLOP MOD IN V18	56
MODULATION SWITCH - 858 SSB CHASSIS	59
WARNING - ANTENNA'S	59
TROUBLE SHOOTING TIP - 858 SSB CHASSIS	60
BLEED OVER FILTER (UPDATE)	61
SALVAGE OF POWER SUPPLIES	62
VIDEO TAPE	63
858 SSB CHASSIS - ADJACENT CHANNEL REJECTION	67

****

VOLUME 20

	PAGE #
TRAM PARTS SOURCE	4
R/S 1175 "EXPORT" WIRING HOOK-UPS	6-7
WINNER & ANSWER TO "SUPER DIODE PUZZLE CONTEST"	16
RATING THE EXPORTS	17
"EDITED" EXPORT ROUNDUP	18-19
EXPORTS	20-21
TESTING THOSE "BULK PAK/QUESTIONABLE/ UNMARKED" ZENERS	26-27
NEEDED INFO	28
MODIFICATION OF EXPORT 02A 5-CRYSTAL CHASSIS	37
02A 'EXPORT' CHASSIS "MULTIPLEX & DIRECT" BAND SWITCHING	38
SAMS CROSS REFERENCE: HELP	54
HINTS/KINKS/GOOFS	55
EXPORT LIST	63-64
SATELLITE PROGRAM INFORMATION	65-68

****

VOLUME 21

	PAGE #
TONE MODULES	7
MRF 477	7
BOGUS 2SC1307	7
VOICE SCRAMBLERS	8-9
EXPORTS/FEEDBACK/RUMORS	10-11
MASTER EXPORT FREQUENCY CHART	12
MODIFICATION OF 'CRYSTAL TYPE' WALKIE TALKIE	20-21
HINTS/KINKS/GOOFS	23
PARTS SOURCE: OAK, DEMCO, LINEARS	23
SAMS CROSS REFERENCE	24
TALK BACK	27
TROUBLE SPOT	29
5KC SWITCH FOR 858 SSB CHASSIS	30
FACTORY "SCREW UPS" 02A EXPORT PCB's	32
UPDATE ON CB & SCANNER MANUALS	33
PARTS SOURCE: TEABERRY, PRESIDENT, SANYO	36
PREVENTATIVE MAINTENANCE/REPAIRING TOP LOAD WHIPS	38-39
SALVAGE THOSE BATTERY OPERATED IRONS	45
STALKER 'ELITE' NOTES	52
HEATH BATTERY ELIMINATOR MODEL IP-2715	54
02A "EXPORT" SCHEMATIC OF PTOS011AOX PCB	54
OAK CATV EQUIP. "UNSCRAMBLING"	57-59
U.S. VERSION MB8719/8734 PLL CHASSIS FEEDBACK	61
CONTRIBUTORS FORM	72

****

VOLUME 22

	PAGE #
EXPORT LIST	14-17
INTERCHANGEABLE PARTS	43
UPDATE: 5KC SWITCH - 858 CHASSIS	46
READ THE SPECS!	49
TROUBLE SPOTS - COBRA AM UNITS WITH uPD2816 PLL	50
BEWARE	51
PERSONAL COMMUNICATOR CONVERSION 49 MHz	52-53
ANTENNA FOR 49 MHz	58
CABLE T.V. AMPLIFIER TEST	58
WANTED: FACTORY SERVICE MANUAL FOR SCANNERS	58
LINEAR AMP - GOLDEN EAGLE 1K SCHEMATICS	59-61
LINEAR AMP - GOLDEN EAGLE 150 SCHEMATIC	62
LINEAR AMP - GOLDEN FALCON 2000 SCHEMATICS	63-64
LINEAR AMP - THUNDERBOLT 101 SCHEMATIC	65
INDEX OF VOLUME 1 THRU VOLUME 21	66-72

****

VOLUME 23

	PAGE #
LOW PASS FILTER	7-8
LOW PASS FILTER w/RECEIVE ANTI BLASTER	7-8
POWER MIKE MODLUE	7&9
CLARIFIER TRACKING CIRCUIT	11
BASE STATION "TAPE" MONITOR	12
SCRAMBLING UPDATE	14
HINTS/KINKS/GOOFS	15
PTS006AOX - O2A EXPORT PCB SCHEMATIC	15
O2A PLL 23 Ch. CHASSIS LOW FREQ. LOGIC MOD	38
KIT #106 INSTALLATION INSTR. FOR COBRA 146GTL	46-47
PHASE LOCK LOOP I.C. CHART	48-59
TALK BACK ON COBRA 146GTL AND UNIDEN AX-144	59
NOISE REDUCTION TECHNIQUES	60
INDEX OF VOLUME 1 THRU VOLUME 22	61-68

****

OOPS! WE GOOFED! AND CORRECTION INDEX!

ORIGINAL VOLUME	PAGE #	CORRECTION IN VOLUME	PAGE #
1	23	5	18
1	61	16	72
2	20,21	5	18
3	4,7,11,25,33	5	18
3	25	11	78
3	33	10	71
4	5,45,50	5	17
4	38	12	66
4	39	13	66
4	51	9	44
4	54	17	70
4	10	21	23
5	19,20,28	6	25
5	24,28,48	10	72
5	32	8	41
5	47	18	62
6	3,12	13	66
6	31,32	7	62,63
6	32	11	78
7	28	18	79
7	31,37	8	42,43
7	46	19	42
7	49	10	25
7	43,53	11	78
7	54	13	66
8	16,17	10	72,73
8	17	9	29
8	52	11	78
9	9,29,51	10	72,74,75
9	12	18	79
9	13	19	79
10	2	11	78
10	10,16,28	12	66
10	25,48	13	66,67
10	49	18	79
10	67	20	42
11	3,10,15,16,71	12	66
11	4,6,11,41,75	13	67
11	10	19	68
11	49	20	42
12	7	15	69
12	27,28	16	72
12	CONV. 28	20	42
12	40	22	6
13	63	15	69
14	12	15	69
14	22,41	16	72
15	58	17	70
15	63,65	16	72
15	48	22	6
16	50,72	17	70
18	23	19	54
18	26	19	61
18	28	20	4
18	16	21	27
19	20,35	20	76
19	35,36	20	24
19	34	21	35
20	35,40,51	21	27,22,16
20	53	23	5
21	18,35	22	6
21	46	24	6
22	21	23	5

****

Volume 1

Volume 2

Volume 3

Volume 4

Volume 5

Volume 6

Volume 7

Volume 8

Volume 9

Volume 10

Volume 11

Volume 12

Volume 13

Volume 14

Volume 15

Volume 1 & 2

Volume 16

Volume 17

Volume 18

Volume 19

Volume 20

Volume 21

Volume 22

Volume 23

Volume 24

SECRET CB®